Table of Contents

1	TITLE, TOC & REV
2	TJA1145A

Revisions

Rev	Description	Date	Approved
X1	Initial	8 NOV 2019	JAMES LIU
A	Release	17 DEC 2019	JAMES LIU

REF DES	JUMPER(DEFAULT)	PAGE NAME
J8	ON	02 - TJA1145A

REF DES	ASSY_OPT	PAGE NAME
R5,R11,J7	DNP	02 - TJA1145A

TJA1145A-EVB

AUTO/IVN

6501 William Cannon Drive West
Austin, TX 78735-8598

This document contains information proprietary to NXP and shall not be used for engineering design, procurement or manufacture in whole or in part without the express written permission of NXP Semiconductors.

© NXP SEMICONDUCTORS Classification: Public

Designer: Jun Qiao	Drawing Title: TJA1145A-EVB		
Drawn by: Jun Qiao	Page Title: TITLE, TOC & REV		
Approved: James Liu	Size C	Document Number SCH-46792 PDF: SPF-46792	Rev A
	Date: Tuesday, December 17, 2019	Sheet 1 of 2	

TJA1145A

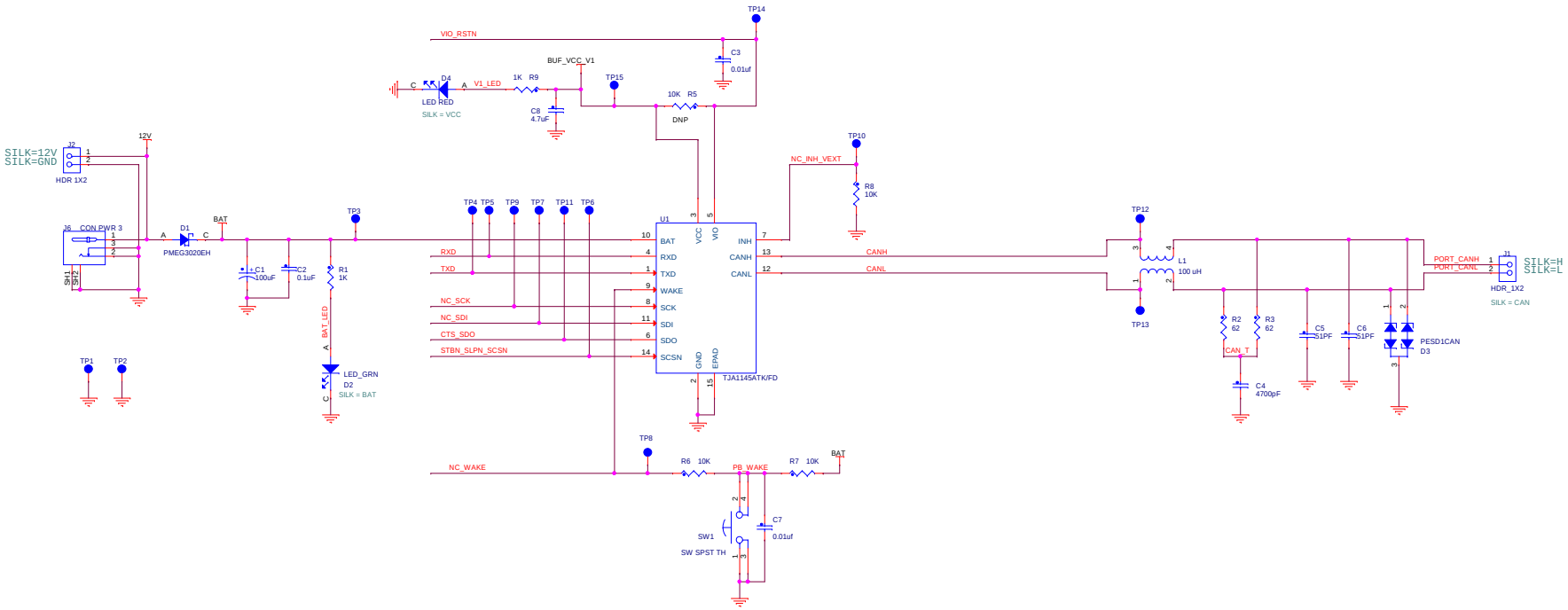

USER INTERFACE

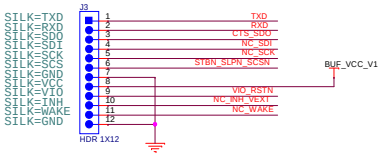

ARDUINO INTERFACE

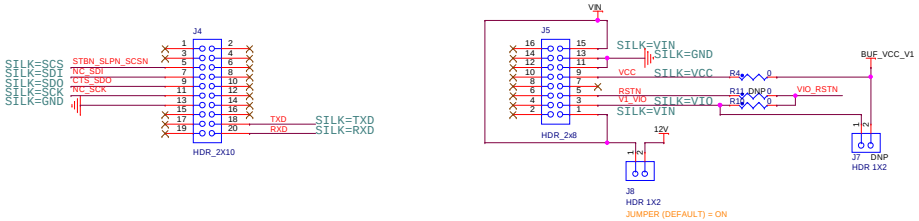

ICAP Classification: CP: ___ IUO: X PUBL: ___

Drawing Title: **TJA1145A-EVB**

Page Title: **TJA1145A**

Size	Document Number	Rev
C	SCH-46792 PDF: SPF-46792	A

Date: Tuesday, December 17, 2019 Sheet 2 of 2