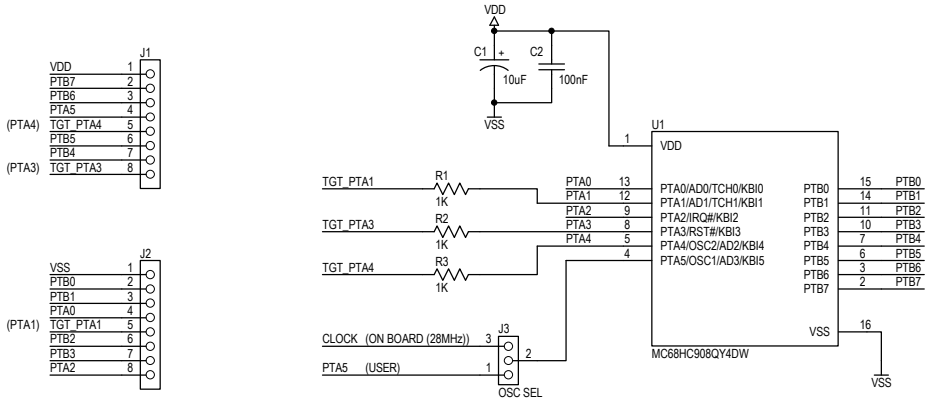
J1
VDD 1
PTB7 2
PTB6 3
PTA5 4
(PTA4) TGT_PTA4 5
PTB5 6
PTB4 7
(PTA3) TGT_PTA3 8
J2
VSS 1
PTB0 2
PTB1 3
PTA0 4
(PTA1) TGT_PTA1 5
PTB2 6
PTB3 7
PTA2 8
VDD
C1 10uF
C2 100nF
VSS
U1
VDD
TGT_PTA1 R1 1K
TGT_PTA3 R2 1K
TGT_PTA4 R3 1K
PTA0 13
PTA1 12
PTA2 9
PTA3 8
PTA4 5
4
PTA0/AD0/TCH0/KBI0
PTA1/AD1/TCH1/KBI1
PTA2/IRQ#/KBI2
PTA3/RST#/KBI3
PTA4/OSC2/AD2/KBI4
PTA5/OSC1/AD3/KBI5
PTB0 15
PTB1 14
PTB2 11
PTB3 10
PTB4 7
PTB5 6
PTB6 3
PTB7 2
VSS 16
MC68HC908QY4DW
CLOCK (ON BOARD (28MHz)) 3
PTA5 (USER) 1
J3
2
OSC SEL

MCU

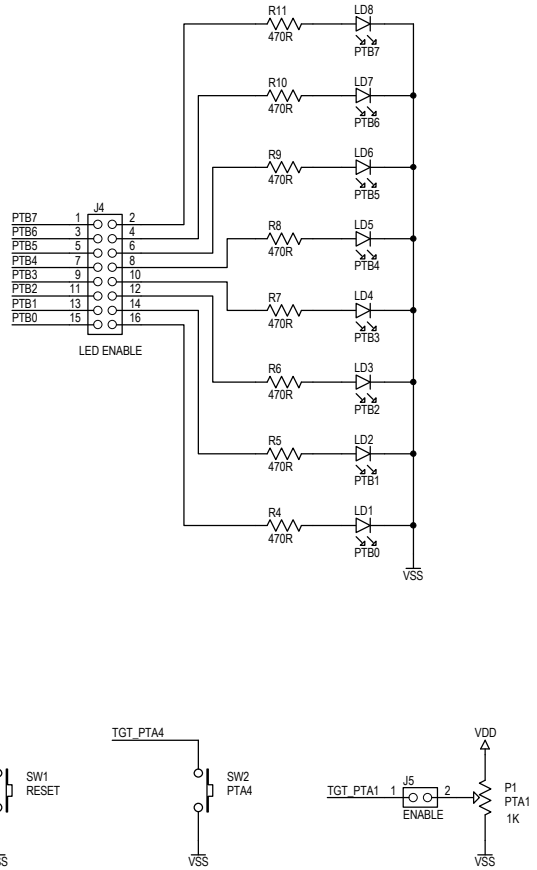
R11 470R LD8 PTB7
R10 470R LD7 PTB6
R9 470R LD6 PTB5
R8 470R LD5 PTB4
R7 470R LD4 PTB3
R6 470R LD3 PTB2
R5 470R LD2 PTB1
R4 470R LD1 PTB0
VSS
J4
PTB7 1 2
PTB6 3 4
PTB5 5 6
PTB4 7 8
PTB3 9 10
PTB2 11 12
PTB1 13 14
PTB0 15 16
LED ENABLE
PTA3
SW1 RESET
VSS
TGT_PTA4
SW2 PTA4
VSS
VDD
TGT_PTA1 1
J5
2
ENABLE
P1 PTA1 1K
VSS

DEMO

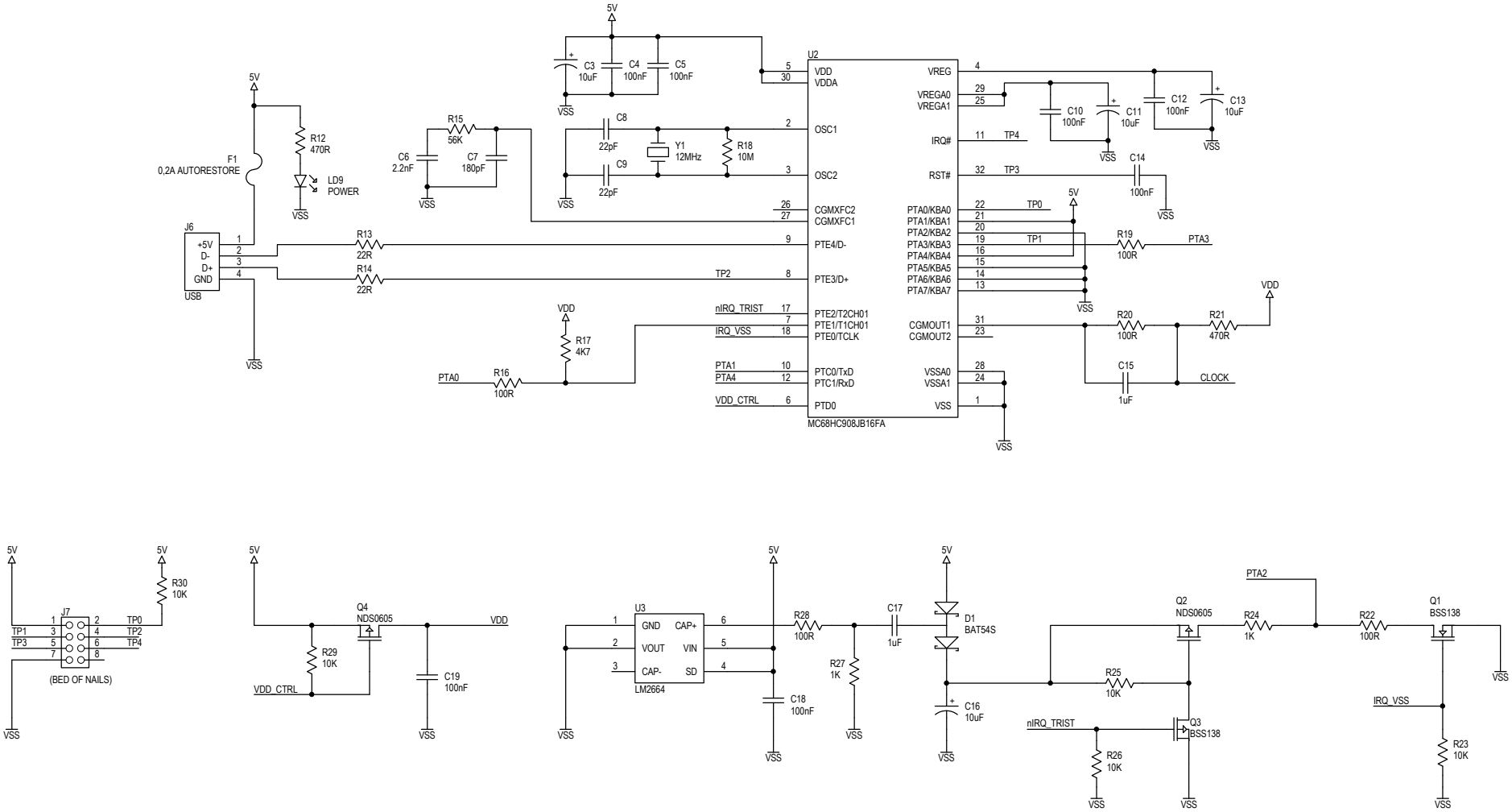

USB TO MON08 INTERFACE