Table of Contents

1	Title Page
2	HB2000ES SCHEMATIC

Revisions

Rev	Description	Date	Approved
A	A085 (Final schematic & BoM), Prototype Release	10 Apr 17	Wayne A

X-FRDM-HB2000ES-EVM

Analog Sensor Product Group
6501 William Cannon Drive West
Austin, TX 78735-8598

This document contains information proprietary to NXP and shall not be used for engineering design, procurement or manufacture in whole or in part without the express written permission of NXP Semiconductors.

ICAP Classification: CP: IUO: X PUBI:

Designer: Wayne Anderson	Drawing Title: X-FRDM-HB2000ES-EVM		
Drawn by: Wayne Anderson	Page Title: Title Page, TOC, Rev. History		
Approved: Wayne Anderson	Size C	Document Number SCH-29798 PDF: SPF-29798	Rev A
	Date: Monday, April 10, 2017	Sheet 1 of 2	

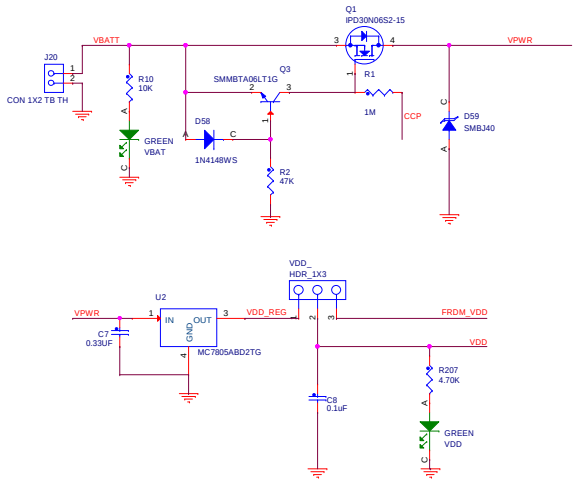

Jumper setting 1-2 for VDD through regulator and 2-3 for VDD supply through FRDM board.

Power Supply

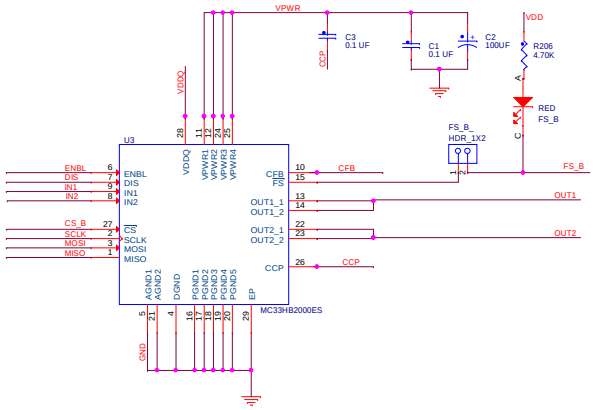

Main Circuit

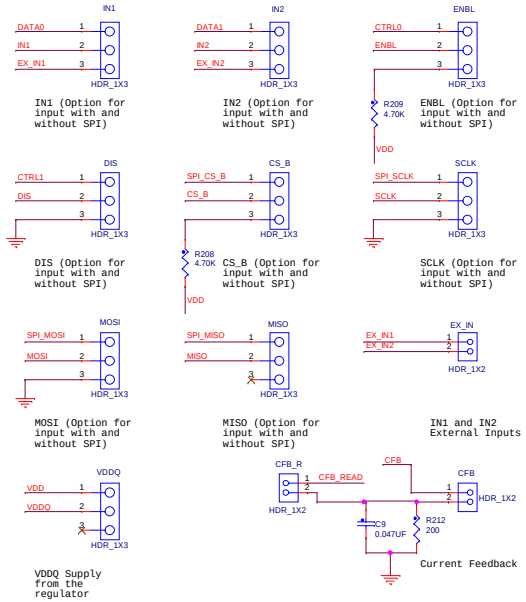

Jumpers

All settings jumper position 1-2 for operation with MCU and 2-3 for manual operation.

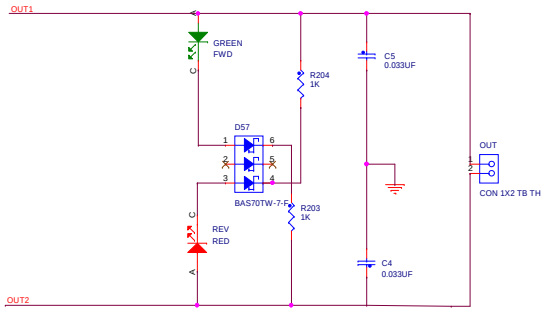

Outputs

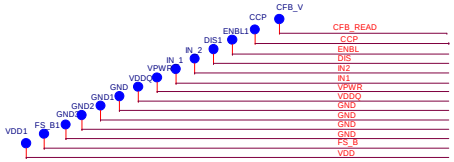

Main Signal Test Points

SPI Signal Test Points

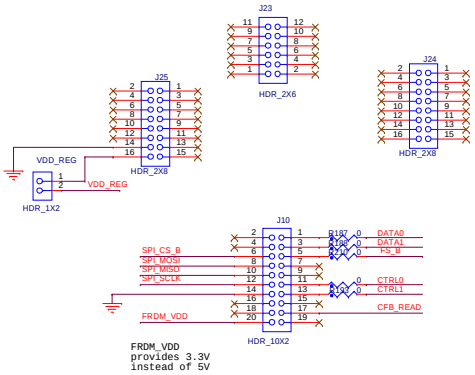

FRDM_VDD provides 3.3V instead of 5V

SPI Connector

ICAP Classification:	CP: ___	IUO: X	PUBE ___
Drawing Title:	X-FRDM-HB2000ES-EVM		
Page Title:	Board Schematic		
Size C	Document Number SCH-29798 PDF: SPF-29798		Rev A
Date: Monday, April 10, 2017		Sheet 2 of 2	