56F826

Evaluation Module User Manual

56F800
16-bit Digital Signal Controllers

DSP56F826EVMUM
Rev. 2
07/2005

freescale.com

freescale™
semiconductor

TABLE OF CONTENTS

Preface vii

Audience vii
Organization vii
Suggested Reading vii
Notation Conventions viii
Definitions, Acronyms, and Abbreviations ix
References x

Chapter 1
Introduction

1.1 56F826EVM Architecture 1-1
1.2 56F826EVM Configuration Jumpers 1-2
1.3 56F826EVM Connections 1-3

Chapter 2
Technical Summary

2.1 56F826 2-2
2.2 Program and Data Memory 2-3
2.3 SPI EEPROM Memory 2-4
2.4 RS-232 Serial Communications 2-5
2.5 Clock Source 2-6
2.6 Operating Mode 2-6
2.7 Debug LEDs 2-7
2.8 Debug Support 2-7
2.8.1 JTAG Connector 2-8
2.8.2 Parallel JTAG Interface Connector 2-9
2.9 External Interrupts 2-10
2.10 Reset 2-11
2.11 Power Supply 2-12
2.12 Stereo Codec 2-13
2.12.1 Analog Input/Output 2-14
2.12.2 Digital Interface 2-14
2.13 Daughter Card Connectors 2-15
2.13.1 Memory Daughter Card Expansion Connector 2-16
2.13.2 Peripheral Daughter Card Expansion Connector 2-17
2.14 Test Points 2-18

Appendix A
56F826EVM Schematics

Appendix B
56F826EVM Bill of Material

LIST OF FIGURES

1-1 Block Diagram of the 56F826EVM 1-2
1-2 56F826EVM Jumper Reference 1-3
1-3 Connecting the 56F826EVM Cables 1-4
2-1 Schematic Diagram of the External Memory Interface 2-3
2-2 SPI EEPROM Memory Block Diagram 2-4
2-3 Schematic Diagram of the RS-232 Interface 2-5
2-4 Schematic Diagram of the Clock Interface 2-6
2-5 Schematic Diagram of the Debug LED Interface 2-7
2-6 Block Diagram of the Parallel JTAG Interface 2-9
2-7 Schematic Diagram of the User Interrupt Interface 2-10
2-8 Schematic Diagram of the RESET Interface 2-11
2-9 Schematic Diagram of the Power Supply 2-12
2-10 Codec Analog Connections 2-14
2-11 CS4218 Stereo Audio Codec 2-15
A-1 56F826 Processor A-2
A-2 RESET, MODE, CLOCK & IRQS A-3
A-3 PROGRAM & DATA SRAM MEMORY A-4
A-4 SPI Serial 1M-bit Serial EEPROM Memory A-5
A-5 SCI PORT, RS-232 and Connector A-6
A-6 SSI 16-bit Stereo Codec A-7
A-7 Parallel JTAG Host Target Interface and JTAG Connector A-8
A-8 Daughter Card Expansion Connectors A-9
A-9 Power Supplies A-10
A-10 Bypass Caps A-11

LIST OF TABLES

1-1 56F826EVM Default Jumper Options 1-3
2-1 SPI Port Connector Description 2-4
2-2 RS-232 Serial Connector Description 2-5
2-3 Operating Mode Selection 2-6
2-4 JTAG Connector Description 2-8
2-5 Parallel JTAG Interface Disable Jumper Selection 2-8
2-6 Parallel JTAG Interface Connector Description 2-9
2-7 Codec Sample Rate Selector 2-13
2-8 Memory Daughter Card Connector Description 2-16
2-9 Peripheral Daughter Card Connector Description 2-17

Preface

This reference manual describes in detail the hardware on the 56F826 Evaluation Module.

Audience

This document is intended for application developers who are creating software for devices using the Freescale 56F826 part.

Organization

This manual is organized into two chapters and two appendixes.

- **Chapter 1, Introduction -** provides an overview of the 56F826EVM and its features.
- **Chapter 2, Technical Summary -** describes the 56F826EVM hardware in detail.
- **Appendix A, 56F826EVM Schematics -** contains the schematics of the 56F826EVM.
- **Appendix B, 56F826EVM Bill of Material -** provides a list of the materials used on the 56F826EVM board.

Suggested Reading

More documentation on the 56F826 and the 56F826EVM kit may be found at URL:

http://www.freescale.com

Notation Conventions

This manual uses the following notational conventions:

Term or Value	Symbol	Examples	Exceptions
Active High Signals (Logic One)	No special symbol attached to the signal name	A0 CLKO	
Active Low Signals (Logic Zero)	Noted with an overbar in text and in most figures	$\overline{WE}$ $\overline{OE}$	In schematic drawings, Active Low Signals may be noted by a backslash: /WE
Hexadecimal Values	Begin with a “$” symbol	$0FF0 $80	
Decimal Values	No special symbol attached to the number	10 34	
Binary Values	Begin with the letter “b” attached to the number	b1010 b0011	
Numbers	Considered positive unless specifically noted as a negative value	5 -10	Voltage is often shown as positive: +3.3V
Blue Text	Linkable on-line	...refer to **Figure 1-1**	
Bold	Reference sources, paths, emphasis	...see: **http://www.freescale.com/**...	

Definitions, Acronyms, and Abbreviations

Definitions, acronyms and abbreviations for terms used in this document are defined below for reference:

codec	COder/DECoder, a part used to convert analog signals to digital (Coder) and digital signals to analog (Decoder)
EEPROM	Electrically Erasable Programmable Read-Only Memory
EVM	Evaluation Module, a hardware platform which allows a customer to evaluate the silicon and develop their application
GPIO	General Purpose Input and Output Port; does not share pin functionality with any other peripheral on the chip and can only be set as an input, output or level-sensitive interrupt input
IC	Integrated Circuit
JTAG	Joint Test Action Group, a bus protocol/interface used for test and debug
LQFP	Low-profile Quad Flat Pack
MPIO	Multi-Purpose Input and Output Port; shares package pins with other peripherals on the chip and can function as a GPIO
OnCE™	On-Chip Emulation, a debug bus and port created by Freescale to enable designers to create a low-cost hardware interface for a professional-quality debug environment
PCB	Printed Circuit Board
PLL	Phase Locked Loop
RAM	Random Access Memory
ROM	Read-Only Memory
SCI	Serial Communications Interface Port
SPI	Serial Peripheral Interface Port
SRAM	Static Random Access Memory
SSI	Synchronous Serial Interface Port
WS	Wait State

References

The following sources were used to produce this manual:

[1] *DSP56800 Family Manual*, , DSP56800FM, Freescale Semiconductor

[2] *56F826/827 User's Manual*, DSP56F826-827UM, Freescale Semiconductor

[3] *56F826 Technical Data*, DSP56F826, Freescale Semiconductor

Chapter 1
Introduction

The 56F826EVM is used to demonstrate the abilities of the 56F826 and to provide a hardware tool allowing the development of applications that use the 56F826.

The 56F826EVM is an evaluation module board that includes a 56F826 part, 16-bit stereo codec, external memory and a daughter card expansion interface. The daughter card expansion connectors are for signal monitoring and user feature expandability.

The 56F826EVM is designed for the following purposes:

- Allowing new users to become familiar with the features of the 56800 architecture. The tools and examples provided with the 56F826EVM facilitate evaluation of the feature set and the benefits of the family.
- Serving as a platform for real-time software development. The tool suite enables the user to develop and simulate routines, download the software to on-chip or on-board RAM, run it, and debug it using a debugger via the JTAG/OnCE™ port. The breakpoint features of the OnCE port enable the user to easily specify complex break conditions and to execute user-developed software at full-speed, until the break conditions are satisfied. The ability to examine and modify all user accessible registers, memory and peripherals through the OnCE port greatly facilitates the task of the developer.
- Serving as a platform for hardware development. The hardware platform enables the user to connect external hardware peripherals. The on-board peripherals can be disabled, allowing the user to reassign any and all of the hybrid controller's peripherals. The OnCE port's unobtrusive design means that all of the memory on the board and on the chip are available to the user.

1.1 56F826EVM Architecture

The 56F826EVM facilitates the evaluation of various features present in the 56F826 part. The 56F826EVM can be used to develop real-time software and hardware products based on the 56F826. The 56F826EVM provides the features necessary for a user to write and debug

software, demonstrate the functionality of that software and interface with the customer's application-specific device(s). The 56F826EVM is flexible enough to allow a user to fully exploit the 56F826's features to optimize the performance of his product, as shown in **Figure 1-1**.

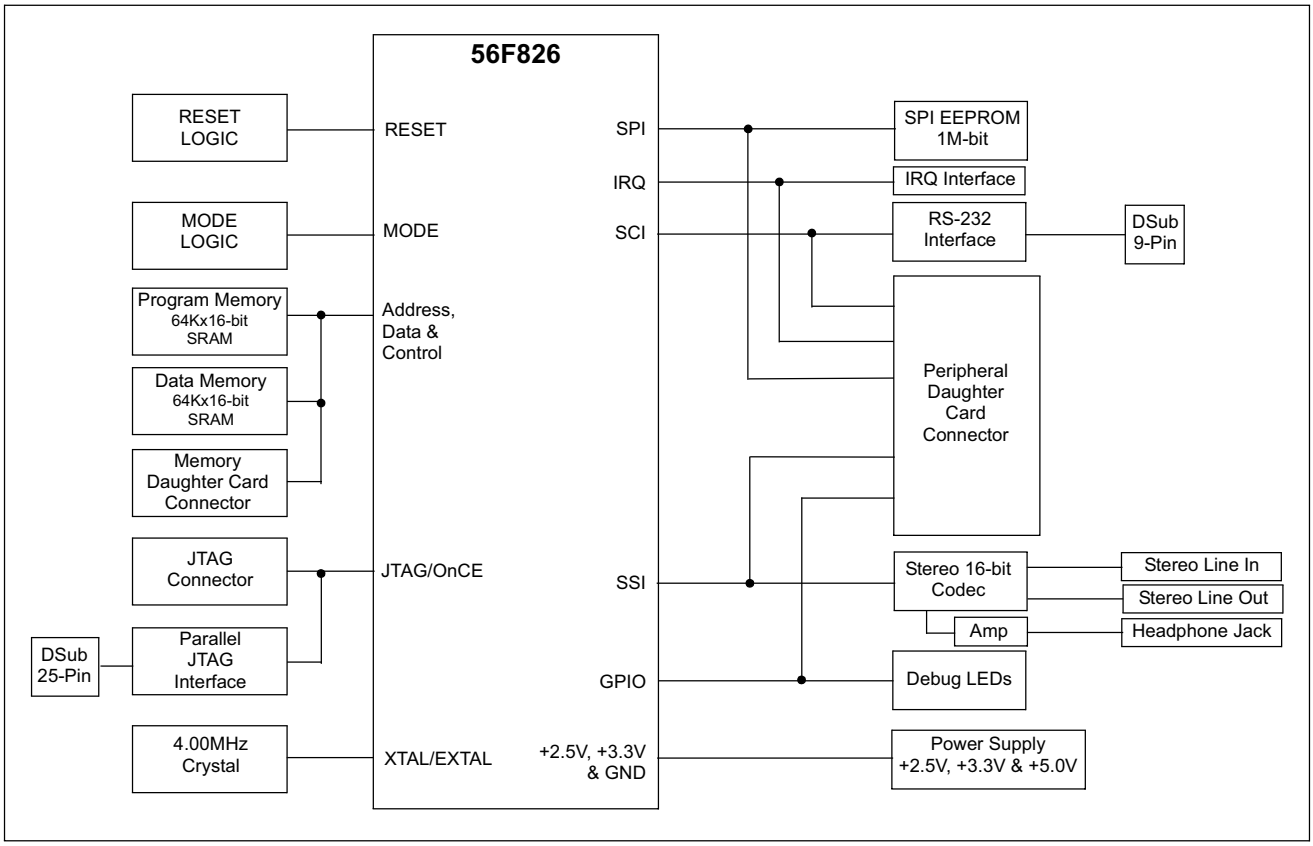

Figure 1-1. Block Diagram of the 56F826EVM

1.2 56F826EVM Configuration Jumpers

Seven jumper groups, (JG1-JG7), shown in **Figure 1-2**, are used to configure various features on the 56F826EVM board. **Table 1-1** describes the default jumper group settings.

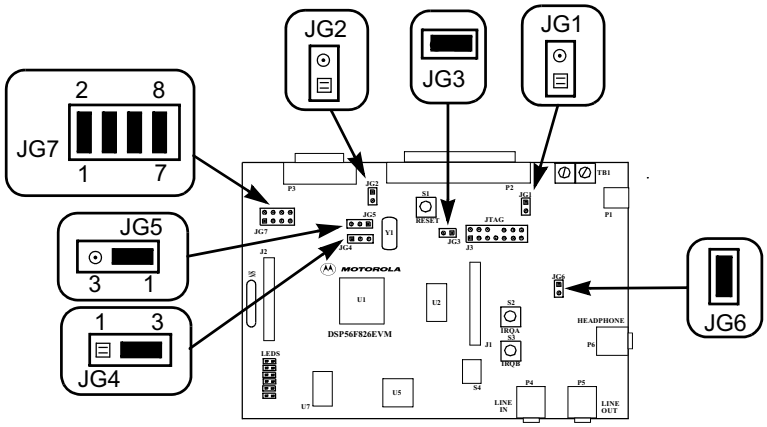

Figure 1-2. 56F826EVM Jumper Reference

Table 1-1. 56F826EVM Default Jumper Options

Jumper Group	Comment	Jumpers Connections
JG1	Enable on-board Parallel JTAG Host/Target Interface	NC
JG2	Enable RS-232 output	NC
JG3	Enable on-board SRAM	1–2
JG4	Use on-board EXTAL crystal input for oscillator	2–3
JG5	Use on-board XTAL crystal input for oscillator	1–2
JG6	Selects device's Mode 0 operation upon exit from reset	1-2
JG7	Enable SPI EEPROM	1–2, 3–4, 5–6 & 7–8

1.3 56F826EVM Connections

An interconnection diagram is shown in **Figure 1-3** for connecting the PC and the external +12.0V DC power supply or external +5.0V DC lab power supply to the 56F826EVM board.

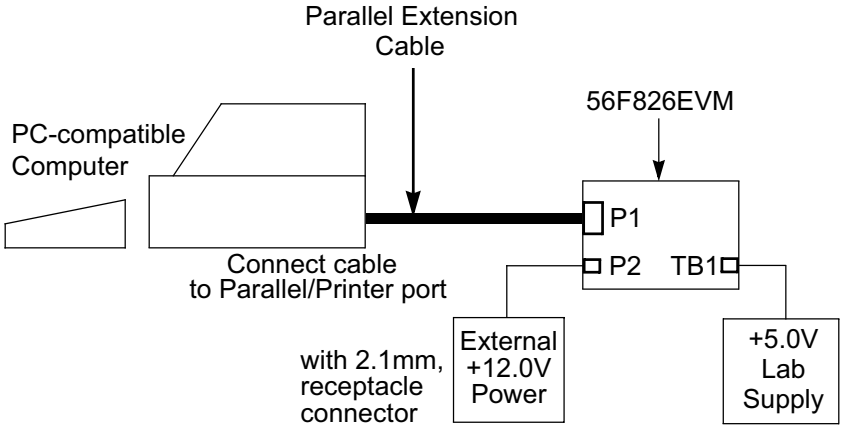

Figure 1-3. Connecting the 56F826EVM Cables

Perform the following steps to connect the 56F826EVM cables:

1. Connect the parallel extension cable to the parallel port of the host computer
2. Connect the other end of the parallel extension cable to P1 on the 56F826EVM board as shown in **Figure 1-3**. This provides the connection which allows the host computer to control the board.
3. Make sure that the external +12.0V DC, 2.1A switching power supply or the external +5.0V DC, 1A lab power supply is not plugged into a +120V AC power source
4. Connect the 2.1mm output power plug from the external switching power supply into P2 on the 56F826EVM board, as shown in **Figure 1-3**. Optionally, attach an external +5.0V DC lab power supply via the 2-pin terminal block, TB1.
5. Apply power to the external power supply. The green Power-On LED, LED7, will illuminate when power is applied correctly.

Chapter 2
Technical Summary

The 56F826EVM is designed as a versatile controller development card for developing real-time software and hardware products to support a new generation of applications in digital and wireless messaging, digital answering machines, feature phones, modems, and digital cameras. The power of the 16-bit 56F826 device, combined with the on-board 64K × 16-bit external program static RAM (SRAM), 64K × 16-bit external data SRAM, RS-232 interface, stereo 16-bit codec interface, Daughter Card Expansion interface and parallel JTAG interface, makes the 56F826EVM ideal for developing and implementing many audio and voice algorithms, as well as for learning the architecture and instruction set of the 56F826 processor.

The main features of the 56F826EVM, with board and schematic reference designators, include:

- 56F826EVM 16-bit +2.5V/+3.3V controller operating at 80MHz [U1]
- External fast static RAM (FSRAM) memory [U2], configured as:
  - 64K×16 bits of Program memory with 0 wait states at 70MHz
  - 64K×16 bits of Data memory with 0 wait states at 70MHz
- 1Mbit Serial EEPROM [U4]
- 4.00MHz crystal oscillator for device frequency generation [Y1]
- Optional external oscillator frequency input connector [JG4 and JG5]
- Joint Test Action Group (JTAG) port interface connector for an external debug Host Target Interface [J3]
- On-board Parallel JTAG Host Target Interface, with a connector for a PC printer port cable [P2]
- RS-232 interface for easy connection to a host processor [U3 and P3]
- 16-bit stereo codec interface [U5, P4 and P5]
- Stereo headphone interface [U6 and P6]

- Codec sample rate selector [S4]
- Peripheral Daughter Card Expansion Connector, to allow the user to connect his own SCI, SSI, SPI or GPIO-compatible peripheral to the controller[J2]
- Memory Daughter Card Expansion Connector, to allow the user to connect his own memory or memory device to the controller[J1]
- On-board power regulation from an external +12V DC-supplied power input [P1]
- On-board power regulation from an optional +5V DC-supplied power input [TB1]
- Light Emitting Diode (LED) power indicator [LED7]
- Six on-board real-time user debugging LEDs [LED1-6]
- Manual RESET push-button [S1]
- Manual interrupt push-button for $\overline{\text{IRQA}}$ [S2]
- Manual interrupt push-button for $\overline{\text{IRQB}}$ [S3]

2.1 56F826

The 56F826EVM uses a Freescale DSP56F826BU80 part, designated as U1 on the board and in the schematics. This part will operate at a maximum speed of 80MHz. A full description of the 56F826, including functionality and user information, is provided in these documents:

- *56F826 Preliminary Technical Data Sheet*, (DSP56F826-827 UM)**:** Provides features list and specifications including signal descriptions, DC power requirements, AC timing requirements and available packaging.
- *56F826/827 16-Bit Digital Signal Processor User's Manual*, (56F826UM): Provides an overview description of the and detailed information about the on-chip components including the memory and I/O maps, peripheral functionality, and control/status register descriptions for each subsystem.
- *DSP56F800Family Manual*, (DSP56F800FM): Provides a detailed description of the core processor, including internal status and control registers and a detailed description of the family instruction set.

Refer to these documents for detailed information about chip functionality and operation. They can be found on this URL:

http://www.freescale.com

2.2 Program and Data Memory

The 56F826EVM uses one bank of 128K×16-bit Fast Static RAM (GSI GS72116, labeled U2) for external memory expansion; see the FSRAM schematic diagram in **Figure 2-1**. This physical memory bank is split into two logical memory banks of 64Kx16-bits: one for Program memory and the other for Data memory. By using the controller's program strobe, $\overline{PS}$, signal line along with the memory chip's A0 signal line, half of the memory chip is selected when program memory accesses are requested and the other half of the memory chip is selected when data memory access are requested. This memory bank will operate with zero wait state accesses while the 56F826 is running at 70MHz. However, when running at 80MHz, the memory bank operates with four wait state accesses. This memory bank can be disabled by removing the jumper at JG3.

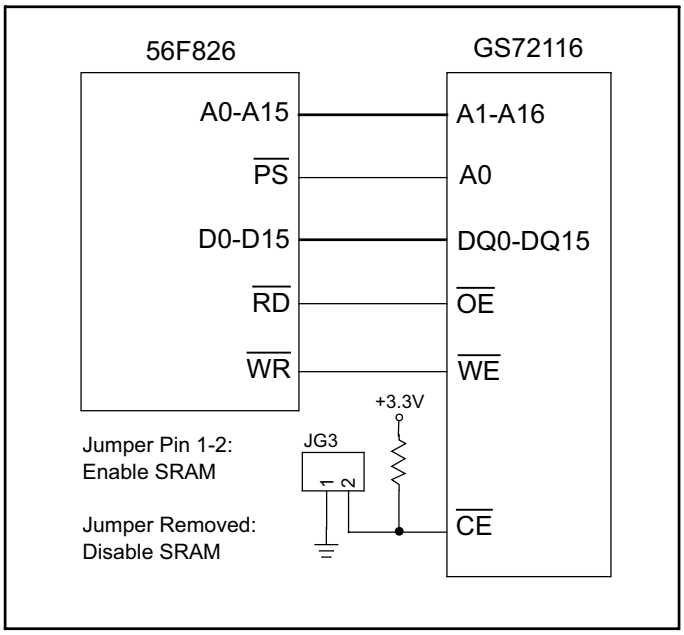

Figure 2-1. Schematic Diagram of the External Memory Interface

2.3 SPI EEPROM Memory

A 1Mbit, +3.3V, SPI, serial EEPROM Memory, Atmel AT45DB011-SC, is provided on the 56F826EVM; reference **Figure 2-2**. This memory connects directly to the SPI Port through a header on the 56F826. It can be used to load program code and data into the 56F826's internal or external memory spaces. A jumper block, JG7, is provided, which allows the user to disconnect the on-board SPI EEPROM from the SPI port and to connect his own SPI port peripheral. The header details are shown in **Table 2-1**.

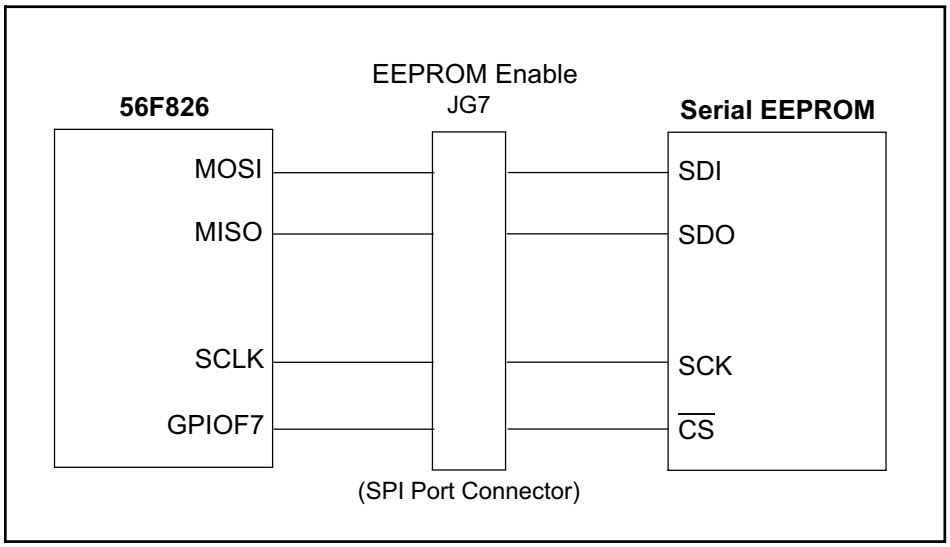

Figure 2-2. SPI EEPROM Memory Block Diagram

Table 2-1. SPI Port Connector Description

JG7			
Pin #	**Signal**	**Pin #**	**Signal**
1	$\overline{SS}$/GPIO7	2	$\overline{CS}$
3	MISO	4	SDO
5	MOSI	6	SDI
7	SCLK	8	SCK

2.4 RS-232 Serial Communications

The 56F826EVM provides an RS-232 interface by the use of an RS-232 level converter, (Maxim MAX3245EEAI, designated as U3). Refer to the RS-232 schematic diagram in **Figure 2-3**. The RS-232 level converter transitions the SCI UART's +3.3V signal levels to RS-232 compatible signal levels and connects to the host's serial port via connector P3. Flow control is not provided, but could be implemented using uncommitted GPIO signals. The pinout of connector P3 is listed in **Table 2-2**. The RS-232 level converter/transceiver can be disabled by placing a jumper at JG2.

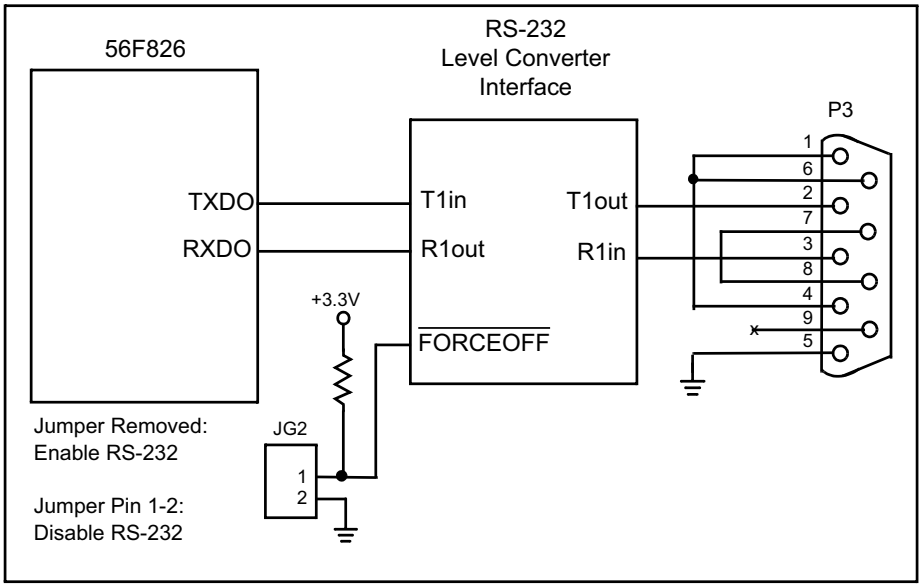

Figure 2-3. Schematic Diagram of the RS-232 Interface

Table 2-2. RS-232 Serial Connector Description

P3			
Pin #	**Signal**	**Pin #**	**Signal**
1	Jumper to 6 & 4	6	Jumper to 1 & 4
2	TXD	7	Jumper to 8
3	RXD	8	Jumper to 7
4	Jumper to 1 & 6	9	N/C
5	GND		

2.5 Clock Source

The 56F826EVM uses a 4.00MHz crystal, Y1, connected to its External Crystal Inputs, EXTAL and XTAL. To achieve its 80MHz maximum operating frequency, the 56F826 uses its internal PLL to multiply the input frequency by 20. An external oscillator source can be connected to the controller by using the oscillator bypass connectors, JG4 and JG5; see **Figure 2-4**. If the input frequency is above 4MHz, then the EXTAL input should be jumpered to ground by adding a jumper between JG4 pins 2 and 3. The input frequency would then be injected on JG5's pin 2. If the controller needs to be synchronized to the codec's sample frequency, then the controller's input frequency should be jumpered using the 12.2280MHz codec frequency. If the input frequency is below 4MHz, then the input frequency can be injected on JG4's pin 2.

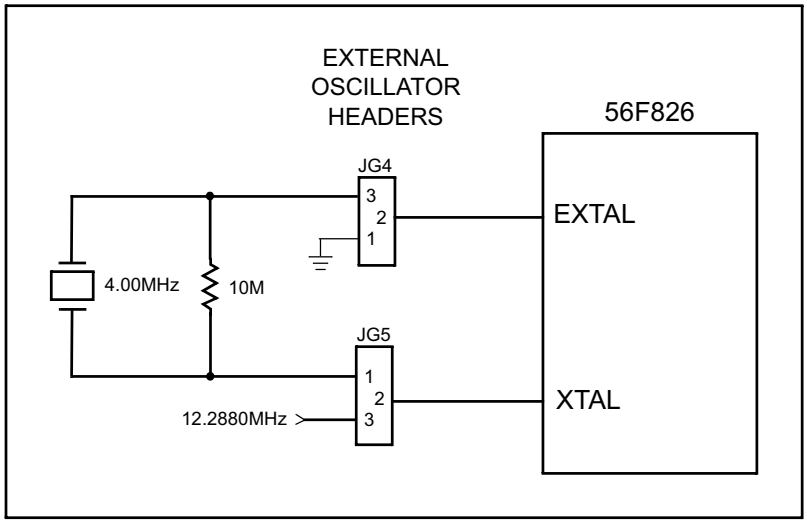

Figure 2-4. Schematic Diagram of the Clock Interface

2.6 Operating Mode

The 56F826EVM provides a boot-up MODE selection jumper, JG6. This jumper is used to select the operating mode of the controller as it exits RESET. Refer to the DSP56F826 User's Manual for a complete description of the chip's operating modes. **Table 2-3** shows the two operating modes available on the 56F826.

Table 2-3. Operating Mode Selection

Operating Mode	JG6	Comment
0	1–2	Bootstrap from internal memory
3	No Jumper	Bootstrap from external memory

2.7 Debug LEDs

Six on-board Light-Emitting Diodes (LEDs) are provided to allow real-time debugging for user programs. These LEDs will allow the programmer to monitor program execution without having to stop the program during debugging; refer to **Figure 2-5**. User LED1 is controlled by Port B's PB0 signal. User LED2 is controlled by PB1. User LED3 is controlled by PB2. User LED4 is controlled by PB3. User LED5 is controlled by PB4. User LED6 is controlled by PB5. Setting PB0, PB1, PB2, PB3, PB4 or PB5 to a Logic One value will turn on the associated LED.

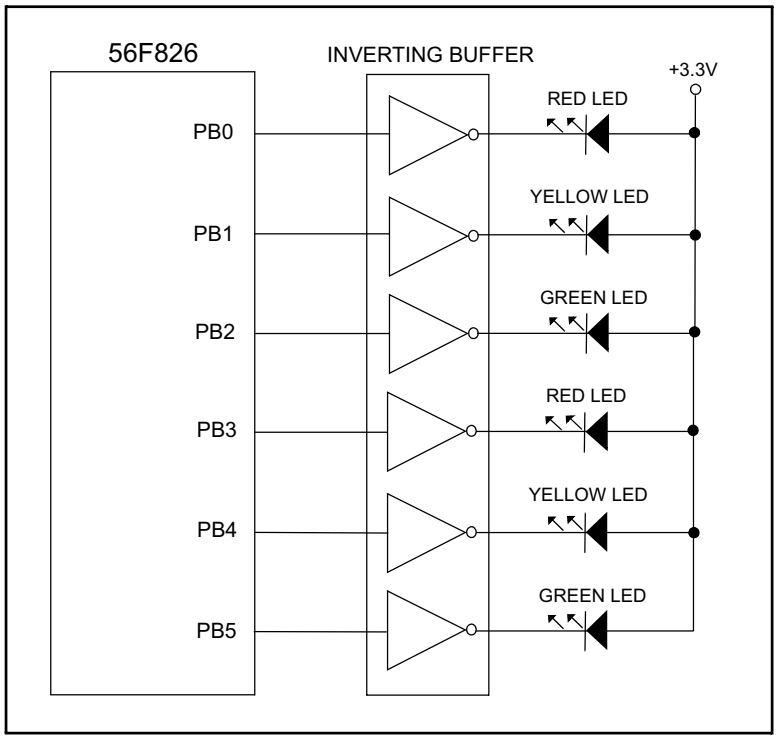

Figure 2-5. Schematic Diagram of the Debug LED Interface

2.8 Debug Support

The 56F826EVM provides an on-board Parallel JTAG Host Target Interface and a JTAG interface connector for external Target Interface support. Two interface connectors are provided to support each of these debugging approaches. These two connectors are designated the JTAG connector and the Host Parallel Interface Connector.

2.8.1 JTAG Connector

The JTAG connector on the 56F826EVM allows the connection of an external Host Target Interface for downloading programs and working with the 56F826's registers. This connector is used to communicate with an external Host Target Interface which passes information and data back and forth with a host processor running a debugger program. **Table 2-4** shows the pin-out for this connector.

Table 2-4. JTAG Connector Description

J3			
Pin #	**Signal**	**Pin #**	**Signal**
1	TDI	2	GND
3	TDO	4	GND
5	TCK	6	GND
7	NC	8	KEY
9	$\overline{\text{RESET}}$	10	TMS
11	+3.3V	12	NC
13	NC	14	$\overline{\text{TRST}}$

When this connector is used with an external Host Target Interface, the parallel JTAG interface should be disabled by placing a jumper in jumper block JG1. Reference **Table 2-5** for this jumper's selection options.

Table 2-5. Parallel JTAG Interface Disable Jumper Selection

JG1	Comment
No jumpers	On-board Parallel JTAG Interface Enabled
1–2	Disable on-board Parallel JTAG Interface

2.8.2 Parallel JTAG Interface Connector

The Parallel JTAG Interface Connector, P2, allows the 56F826 to communicate with a Parallel Printer Port on a Windows PC; reference **Figure 2-6**. By using this connector, the user can download programs and work with the 56F826's registers. **Table 2-6** shows the pin-out for this connector. When using the parallel JTAG interface, the jumper at JG1 should be removed, as shown in **Table 2-5**.

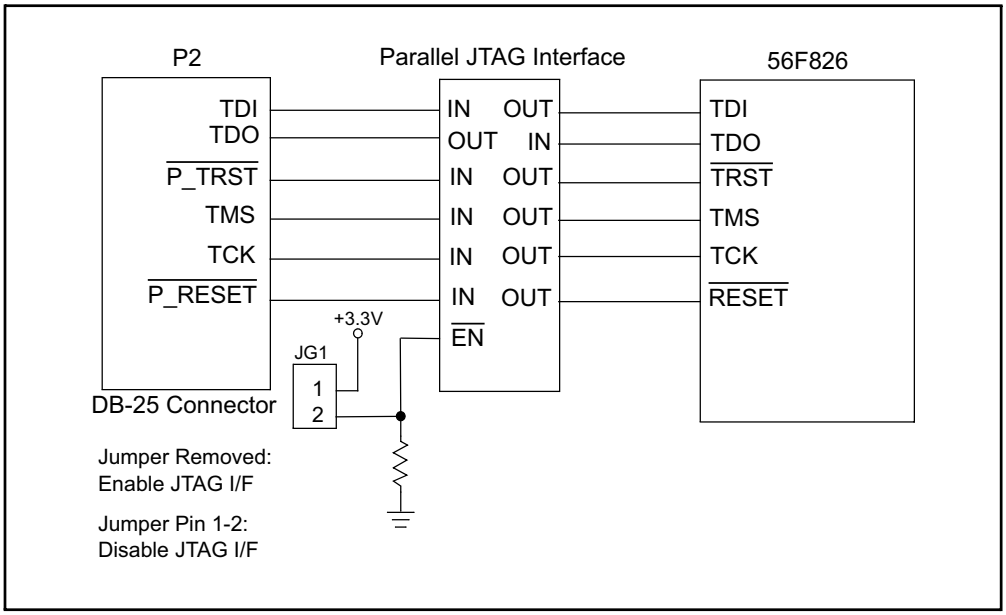

Figure 2-6. Block Diagram of the Parallel JTAG Interface

Table 2-6. Parallel JTAG Interface Connector Description

P2			
Pin #	**Signal**	**Pin #**	**Signal**
1	NC	14	NC
2	PORT_RESET	15	PORT_IDENT
3	PORT_TMS	16	NC
4	PORT_TCK	17	NC
5	PORT_TDI	18	GND
6	$\overline{\text{PORT_TRST}}$	19	GND

Table 2-6. Parallel JTAG Interface Connector Description (Continued)

P2			
Pin #	**Signal**	**Pin #**	**Signal**
7	NC	20	GND
8	PORT_IDENT	21	GND
9	PORT_VCC	22	GND
10	NC	23	GND
11	PORT_TDO	24	GND
12	NC	25	GND
13	PORT_CONNECT		

2.9 External Interrupts

Two on-board push-button switches are provided for external interrupt generation, as shown in Figure 2-7. SW2 allows the user to generate a hardware interrupt for signal line $\overline{\text{IRQA}}$. SW3 allows the user to generate a hardware interrupt for signal line $\overline{\text{IRQB}}$. These two switches allow the user to generate interrupts for his user-specific programs.

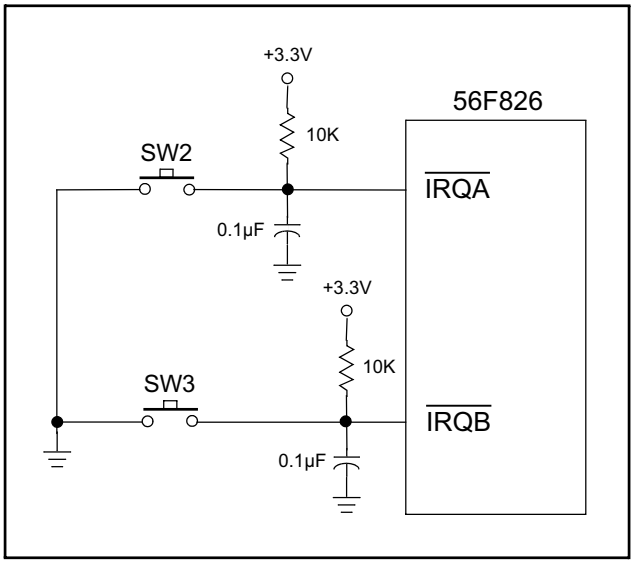

Figure 2-7. Schematic Diagram of the User Interrupt Interface

2.10 Reset

Logic is provided on the 56F826 to generate an internal Power-On RESET. Additional reset logic is provided to support the RESET signals from the JTAG connector, the Parallel JTAG Interface and the user RESET push-button; refer to **Figure 2-8**.

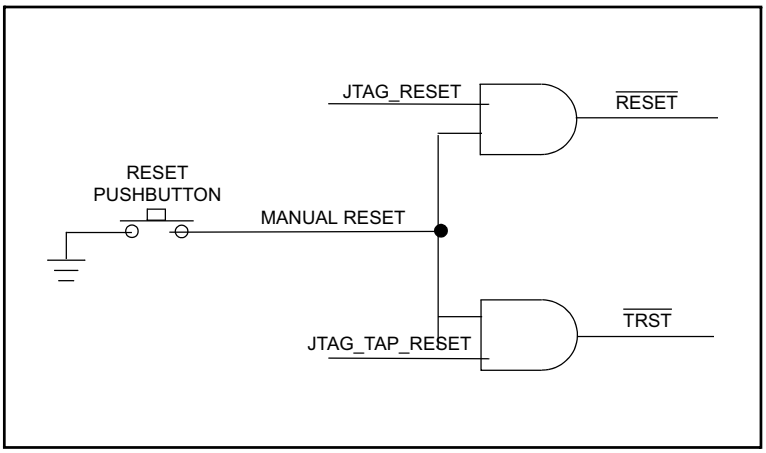

Figure 2-8. Schematic Diagram of the RESET Interface

2.11 Power Supply

The main power input, +12.0V DC, to the 56F826EVM is through a 2.1mm coax power jack. An optional +5.0V DC power supply input is available through a 2-pin terminal block, TB1. A 1.2A power supply is provided with the 56F826EVM; however, less than 500mA is required by the EVM. The remaining current is available for the user's custom daughter card application, when connected to the daughter card interface. The power regulation on the 56F826EVM provides +5.0V DC voltage regulation for the codec's analog circuits and to the additonal voltage regulation logic on the EVM. The additional voltage regulation logic provides +2.5V DC voltage regulation for the controller's core and +3.3V DC voltage regulation for the controller's I/O, memory, parallel JTAG interface and supporting logic; refer to **Figure 2-9**. Power applied to the 56F826EVM is indicated with a Power-On LED, referenced as LED7.

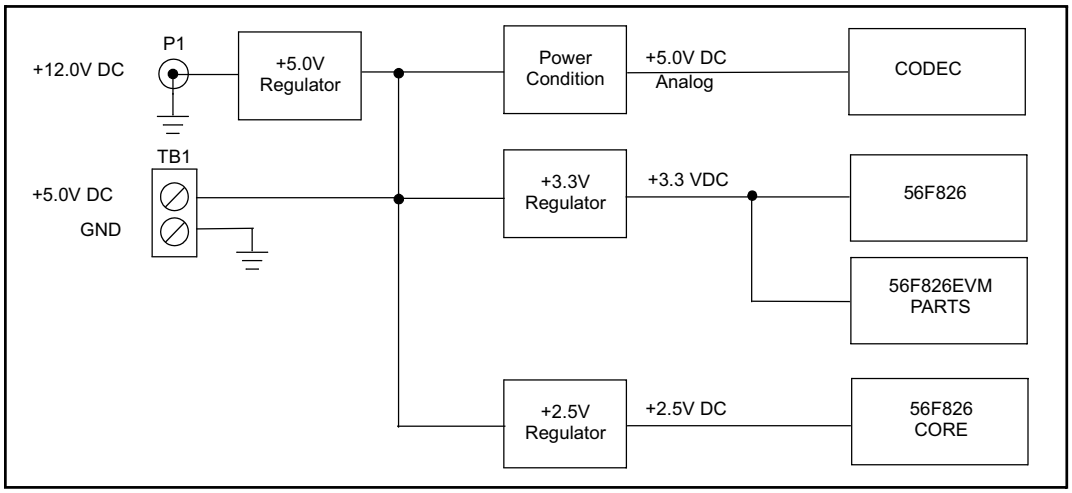

Figure 2-9. Schematic Diagram of the Power Supply

2.12 Stereo Codec

A 16-bit audio quality stereo codec, Crystal Semiconductor CS4218, is connected to the 56F826's SSI port to support audio, voice and signal analysis applications. The codec is clocked with a 12.288MHz oscillator, allowing the codec to operate between a sample frequency of 8kHz and 48kHz. The sample rate can be manually set using the appropriate switch positions on dip switch S4. This three position dip switch makes the sample rate selections detailed in **Table 2-7** possible. The codec supports +3.3V digital levels, eliminating the need for voltage level translation circuitry. Additionally, a set of zero ohm resistors are provided on the EVM to allow a user to disconnect the on-board codec from the SSI port and to connect his own codec to the SSI port; see **Figure 2-11**. The on-board codec has analog signal-conditioning logic, allowing direct connection to its line level input and line level output signals through two 1/8" stereo jacks; reference **Figure 2-10**.

Table 2-7. Codec Sample Rate Selector

SW 4 Position 3 (MF6)	**SW 4 Position 2** (MF7)	**SW 4 Position 3** (MF8)	**Sample Rate**
ON	ON	ON	48.00kHz
ON	ON	OFF	32.00kHz
ON	OFF	ON	24.00kHz
ON	OFF	OFF	19.20kHz
OFF	ON	ON	16.00kHz
OFF	ON	OFF	12.00kHz
OFF	OFF	ON	9.60kHz
OFF	OFF	OFF	8.00kHz

2.12.1 Analog Input/Output

The 56F826EVM uses jacks for line level stereo input, line level stereo output and stereo headphone output. A National Semiconductor LM4880 provides the drive required for the use of headphones. This device offers a THD, which is superior to the CS4218's on-chip headphone drive circuitry by a factor of two. The basic analog codec connections are shown in **Figure 2-10**.

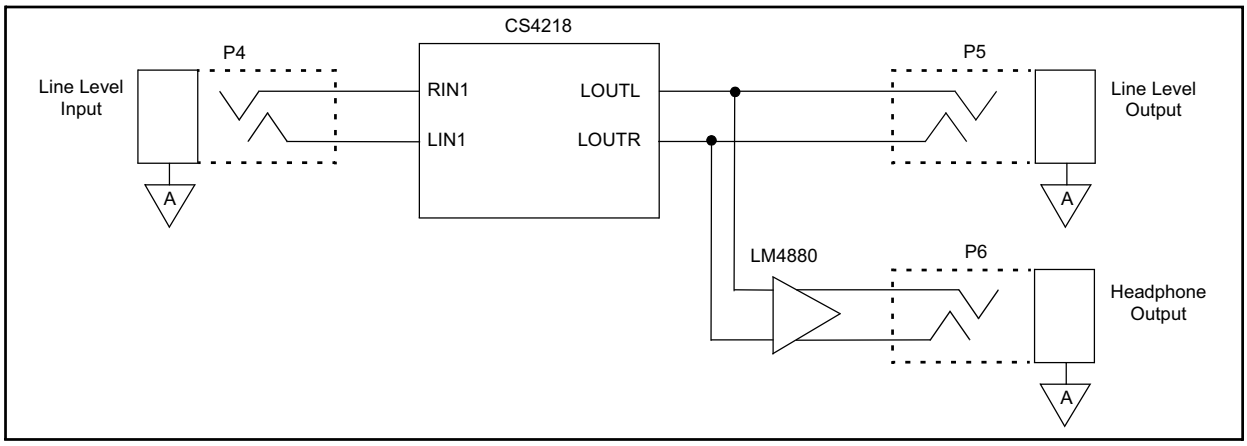

Figure 2-10. Codec Analog Connections

2.12.2 Digital Interface

The serial interface of the codec transfers digital audio data and control data into and out of the device. The SSI port, which consists of independent transmitter and receiver sections, is used for serial communication with the codec.

On the controller side, the Serial Transmit Data, STD, pin is an output when data is being transmitted to the codec. The Serial Receive Data, SRD, pin is an input when data is being received from the codec. These two pins are connected to the codec Serial Data Input, SDIN, and Serial Data Output, SDOUT, pins.

The controller's Transmit Serial Clock, STCK, pin provides the serial bit rate clock for the SSI interface. It is connected to the codec Serial Port Clock, SCLK, pin. Data is transmitted on the rising edge of SCLK and is received on the falling edge of SCLK.

The controller's GPIO PORT D Bit 0 pin, PD0, is programmed to control the codec's Active Low Reset, RESET, signal.

The Serial Transmit Frame Sync pin, STFS, is programmed to control the codec's Frame Sync, FSYNC, signal. FSYNC is sampled by SCLK, with a rising edge indicating that a new frame is

about to start. The FSYNC frequency is always the system's sample rate. It may be an input to the codec, or it may be an output from the codec in data mode.

The basic codec digital connections are shown in **Figure 2-11**.

The codec's MODE is set by the three MODE selection resistors, R96-R98. In the factory default setting of MODE 4, the codec is set to be the Master of the SPI bus with its data word set at 32 bits per frame; i.e., 16 bits, Left channel and 16 bits, Right channel. The sample rate is selected on Sample Rate Selector switch S4; reference **Table 2-7** for selection options. Codec control information is sent over a separate serial port using: PD1 as the Control Chip Select, CCS, signal; PD2 as the Control Data Input, CDIN, signal; and PD3 as the Control Clock, CCLK, signal.

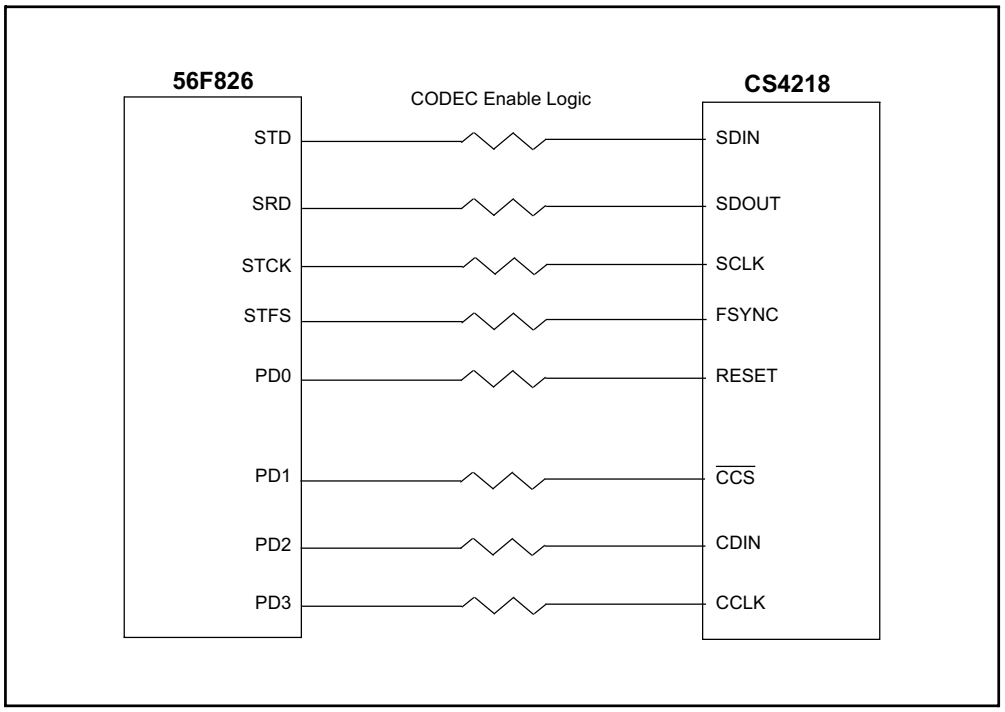

Figure 2-11. CS4218 Stereo Audio Codec

2.13 Daughter Card Connectors

The EVM board contains two daughter card expansion connectors. One connector, J1, contains the controller's external memory bus signals. The other connector, J2, contains the controller's peripheral port signals.

2.13.1 Memory Daughter Card Expansion Connector

The controller's external memory bus signals are connected to the Memory Daughter Card Expansion connector, J1. Table 2-8 shows the port signal to pin assignments.

Table 2-8. Memory Daughter Card Connector Description

J1			
Pin #	**Signal**	**Pin #**	**Signal**
1	A10	2	A11
3	A9	4	$\overline{DS}$
5	A8	6	A15
7	A7	8	A14
9	GND	10	GND
11	$\overline{WR}$	12	A13
13	D0	14	A12
15	D1	16	D8
17	D2	18	D9
19	GND	20	GND
21	D3	22	D10
23	D4	24	D11
25	D5	26	D12
27	D6	28	D13
29	GND	30	GND
31	D7	32	D14
33	$\overline{PS}$	34	D15
35	A0	36	$\overline{RD}$
37	A1	38	A6
39	GND	40	GND
41	A2	42	A5

Table 2-8. Memory Daughter Card Connector Description (Continued)

J1			
Pin #	**Signal**	**Pin #**	**Signal**
43	A3	44	A4
45	GND	46	GND
47	+3.3V	48	+3.3V
49	GND	50	GND
51	GND		

2.13.2 Peripheral Daughter Card Expansion Connector

The controller's peripheral port signals are connected to the Peripheral Daughter Card Expansion connector, J2. Table 2-9 shows the port signal to pin assignments.

Table 2-9. Peripheral Daughter Card Connector Description

J2			
Pin #	**Signal**	**Pin #**	**Signal**
1	PB0	2	PB1
3	CLKO	4	PB2
5	TA0	6	TA1
7	PB3	8	PB4
9	TA2	10	TA3
11	PB5	12	PB6
13	GND	14	GND
15	SRD	16	PB7
17	SRFS	18	PD0
19	SCLK	20	PD1
21	GND	22	GND
23	MOSI	24	PD2

Table 2-9. Peripheral Daughter Card Connector Description (Continued)

J2			
Pin #	**Signal**	**Pin #**	**Signal**
25	MISO	26	PD3
27	GND	28	GND
29	$\overline{SS}$	30	PD4
31	SRCK	32	PD5
33	STFS	34	PD6
35	$\overline{RESET}$	36	PD7
37	GND	38	GND
39	STD	40	RXD1
41	STCK	42	TXD1
43	$\overline{IRQB}$	44	RXD0
45	$\overline{IRQA}$	46	TXD0
47	+3.3V	48	+3.3V
49	GND	50	GND
51	GND		

2.14 Test Points

The 56F826EVM board has a total of seven test points. Three digital GND test points are located in corners of the board. The +5.0VA and AGND test points are located in the analog corner of the board. The +2.5V and +3.3V test points are located in the power supply section of the board.

Appendix A
56F826EVM Schematics

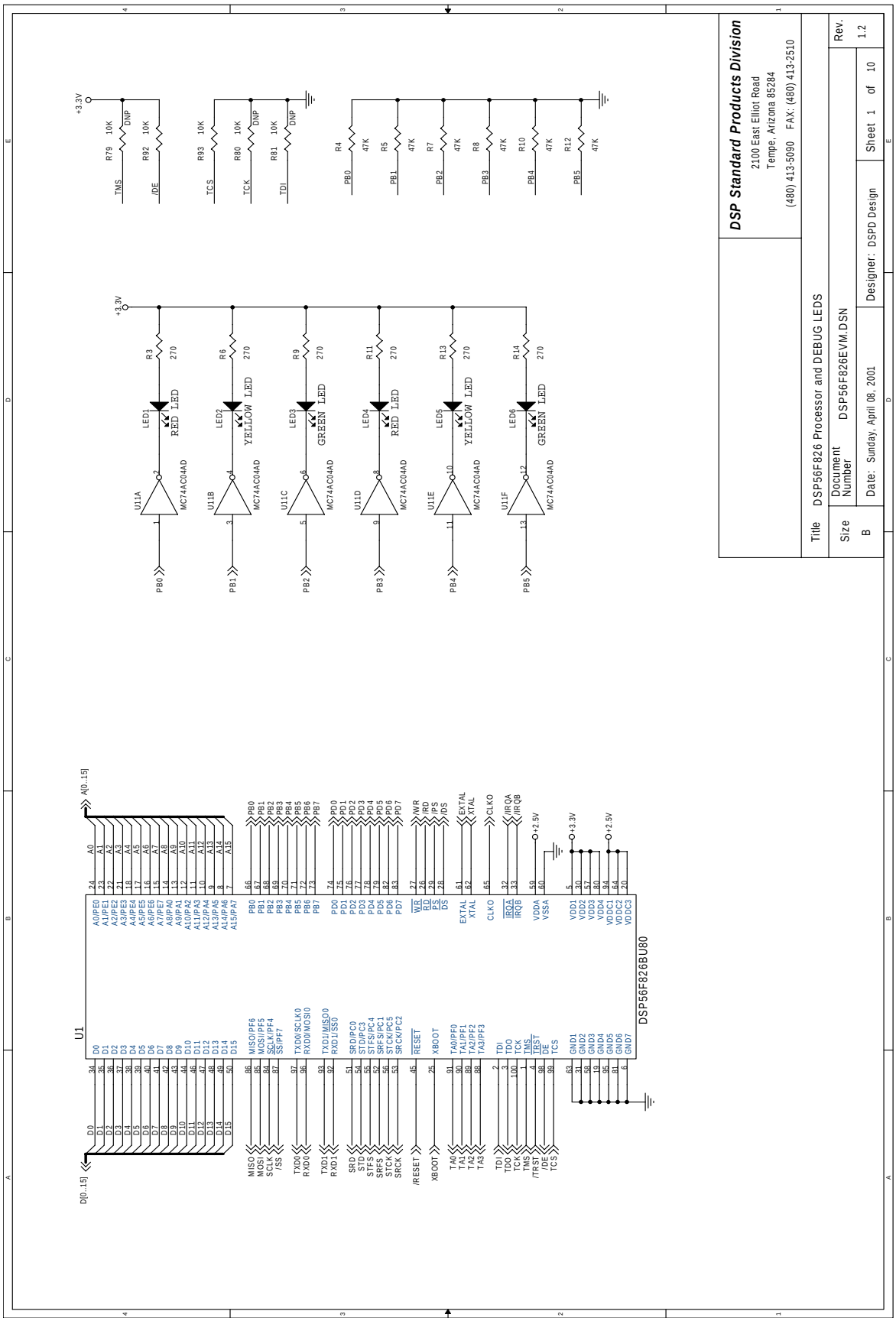

Figure A-1. 56F826 Processor

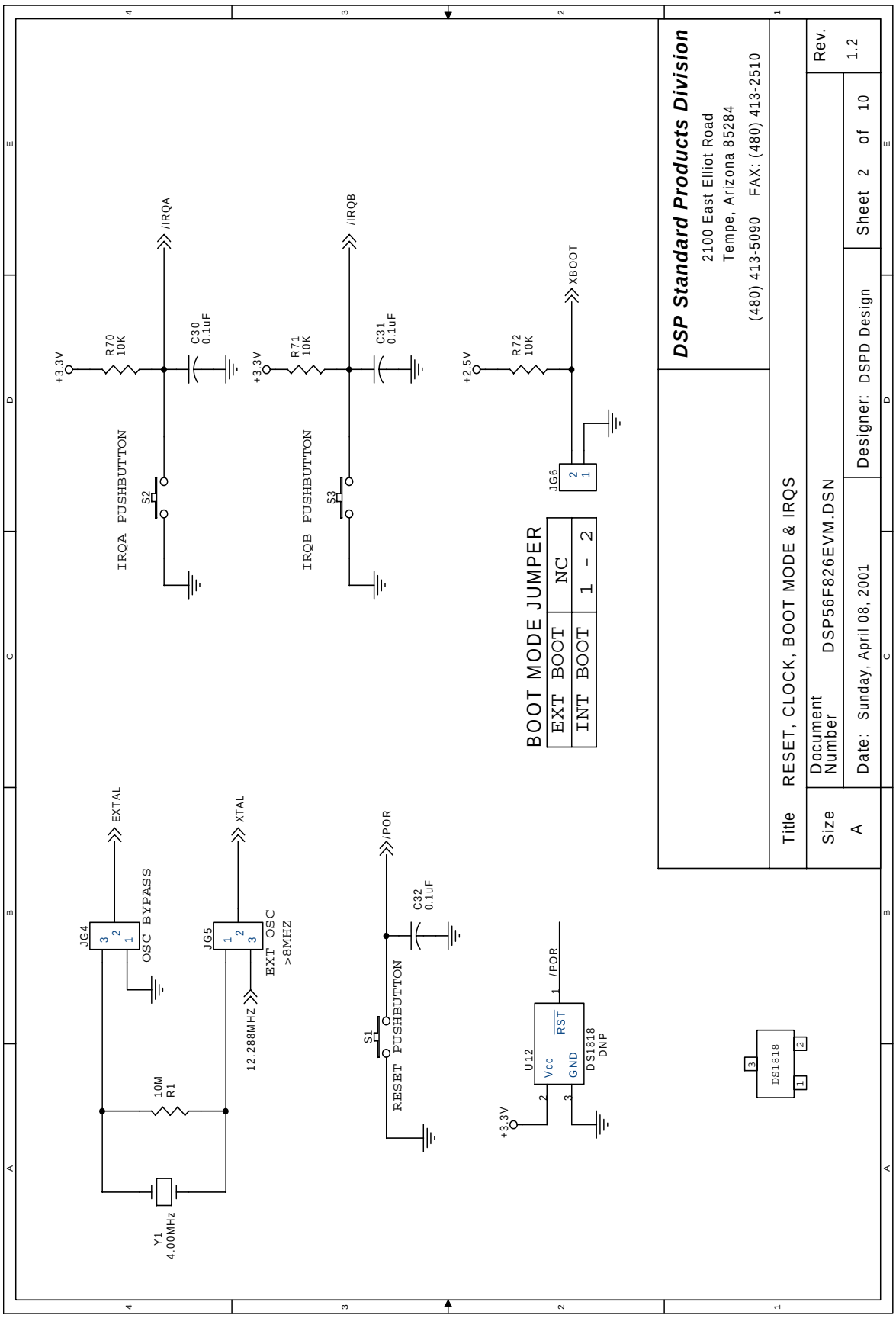

Figure A-2. Reset, Mode, Clock & IRQs

56F826EVM Schematics, Rev. 2

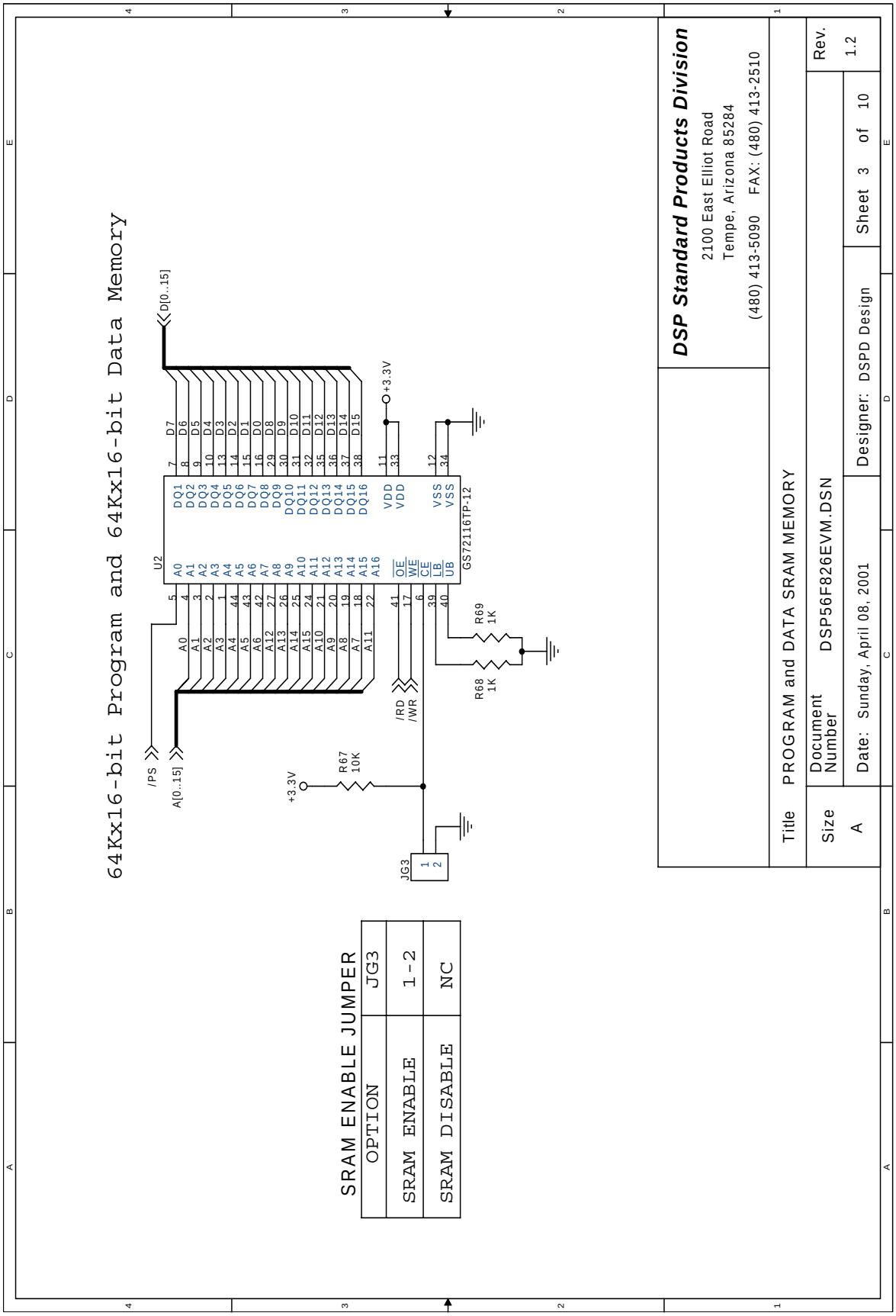

Figure A-3. Program & Data SRAM Memory

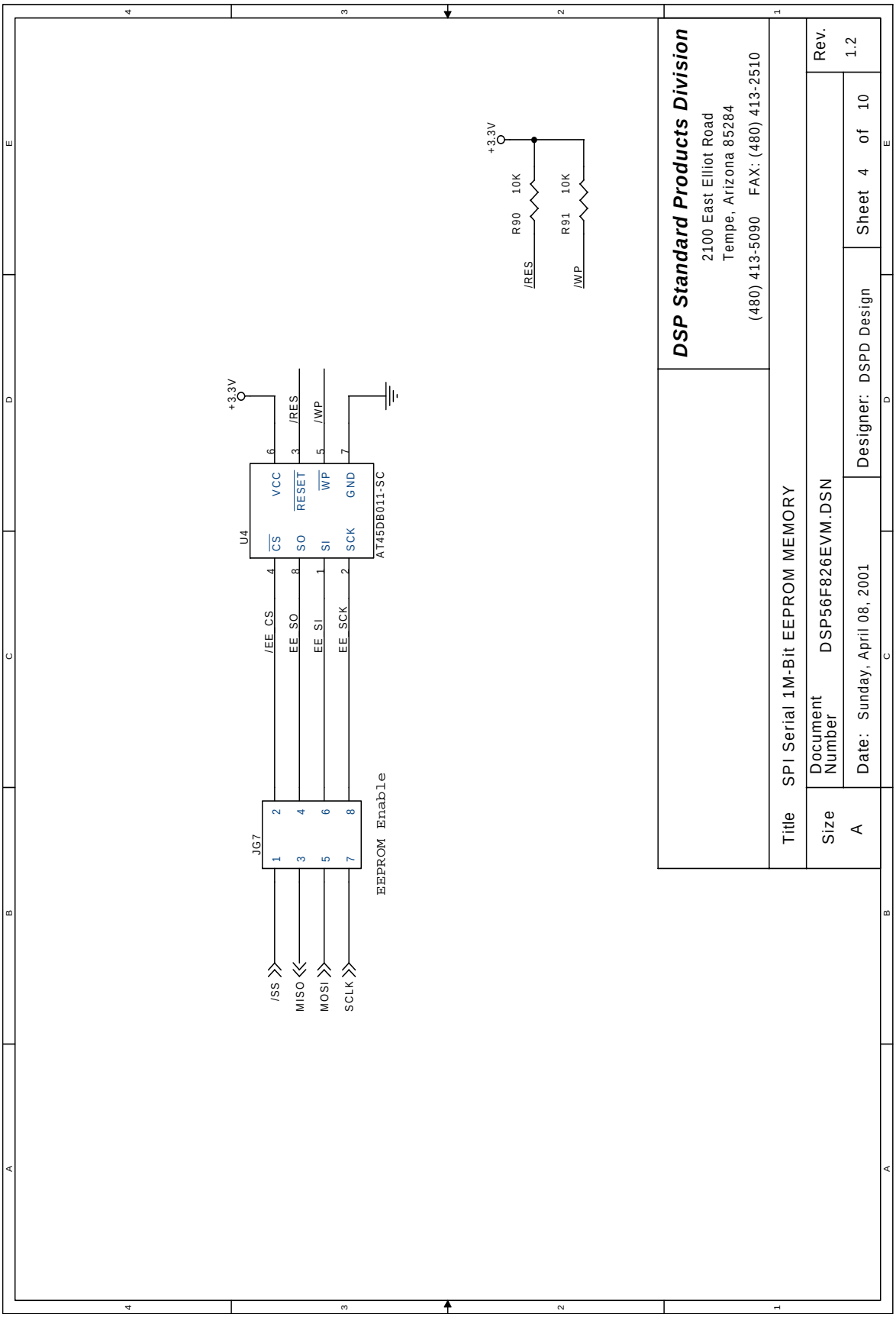

Figure A-4. SPI Serial 1M-bit Serial EEPROM Memory

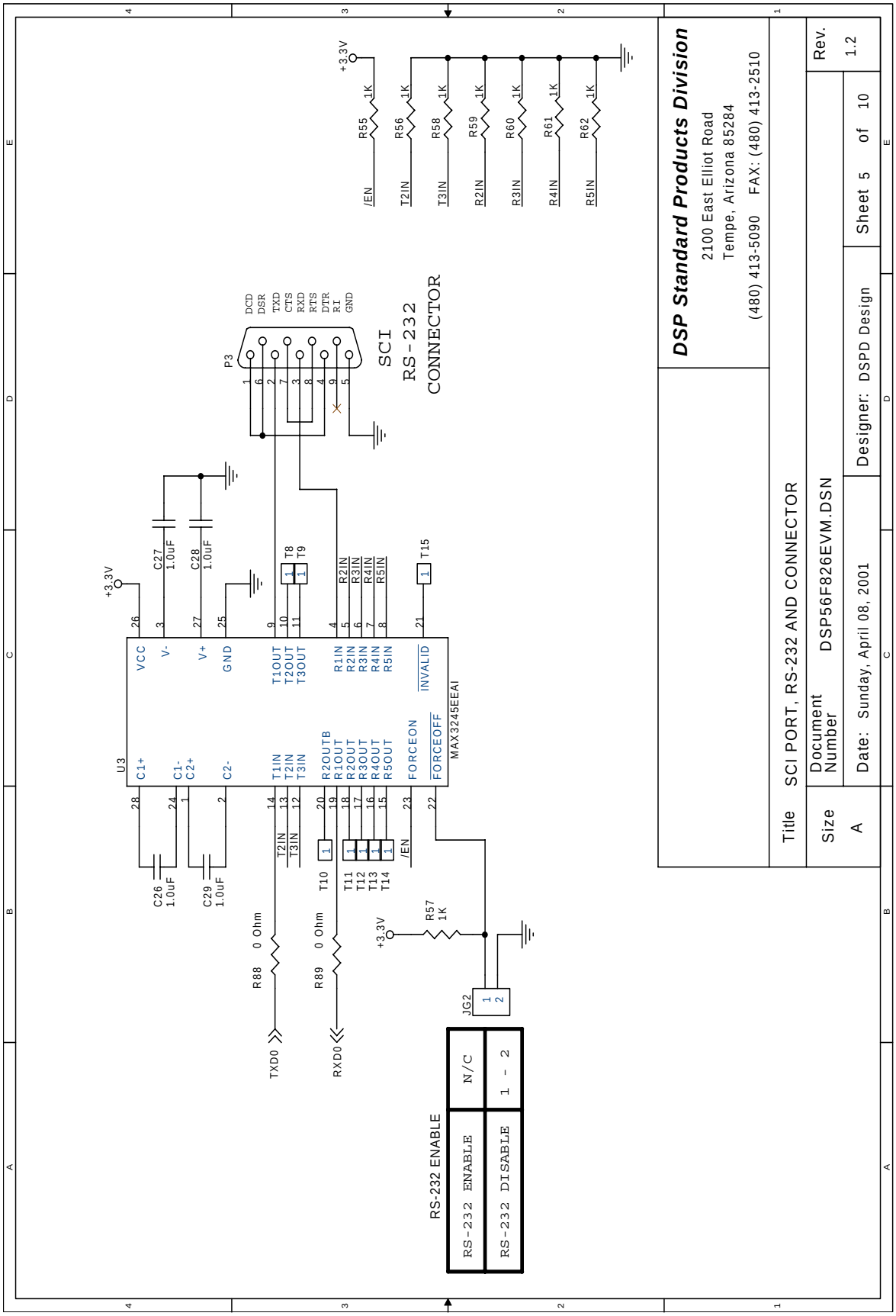

Figure A-5. SCI Port, RS-232 and Connector

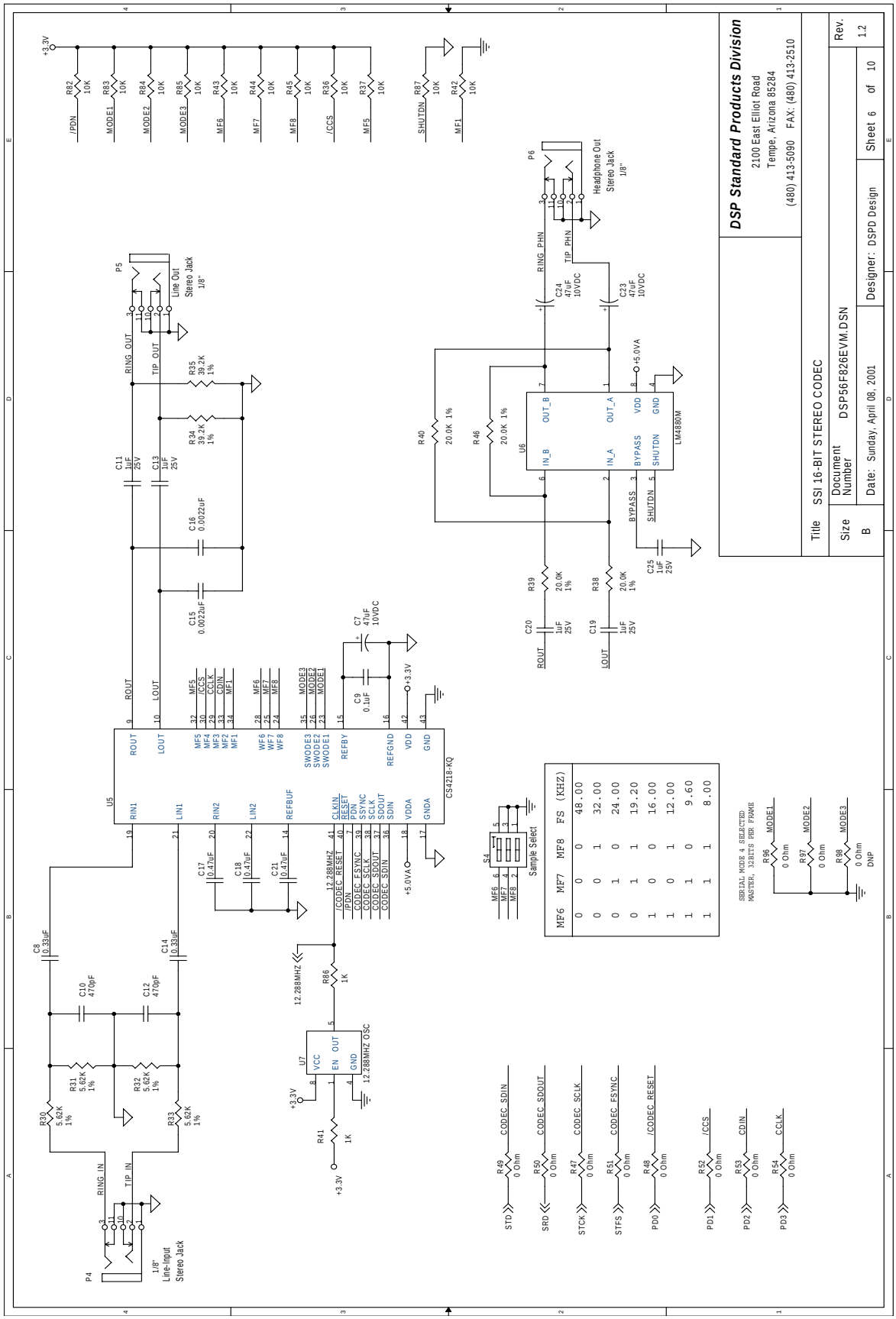

Figure A-6. SSI 16-bit Stereo Codec

56F826EVM Schematics, Rev. 2

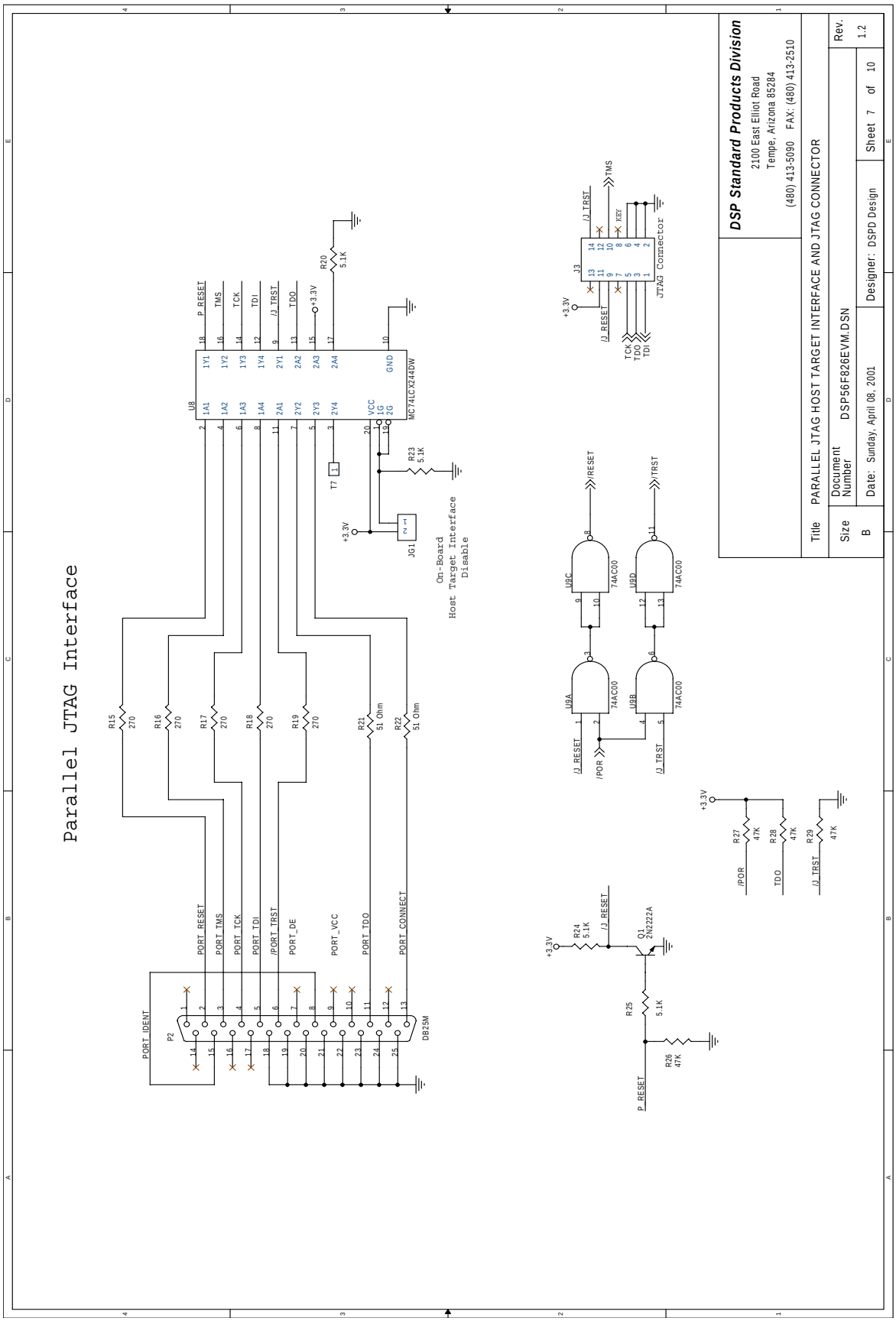

Figure A-7. Parallel JTAG Host Target Interface and JTAG Connector

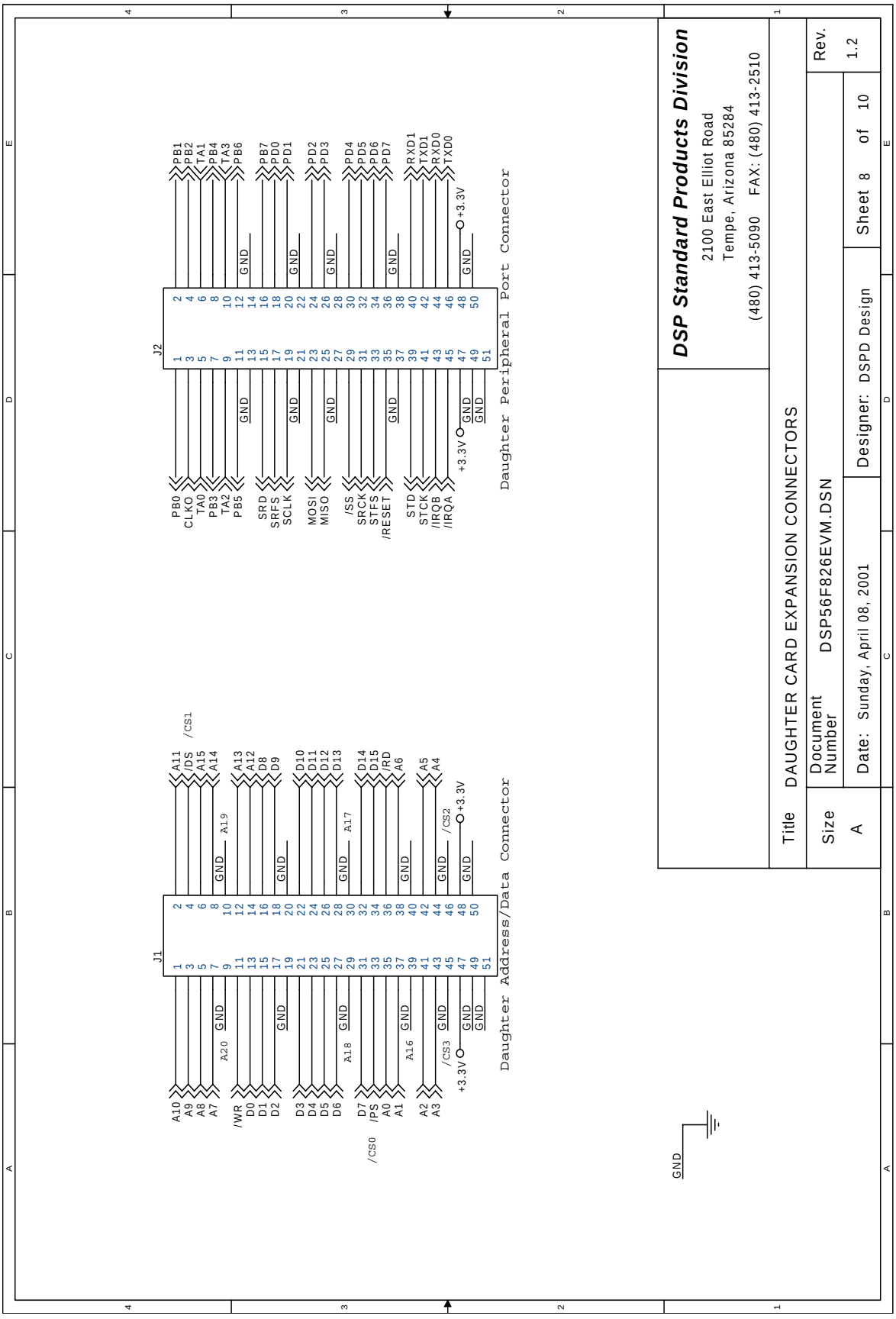

Figure A-8. Daughter Card Expansion Connectors

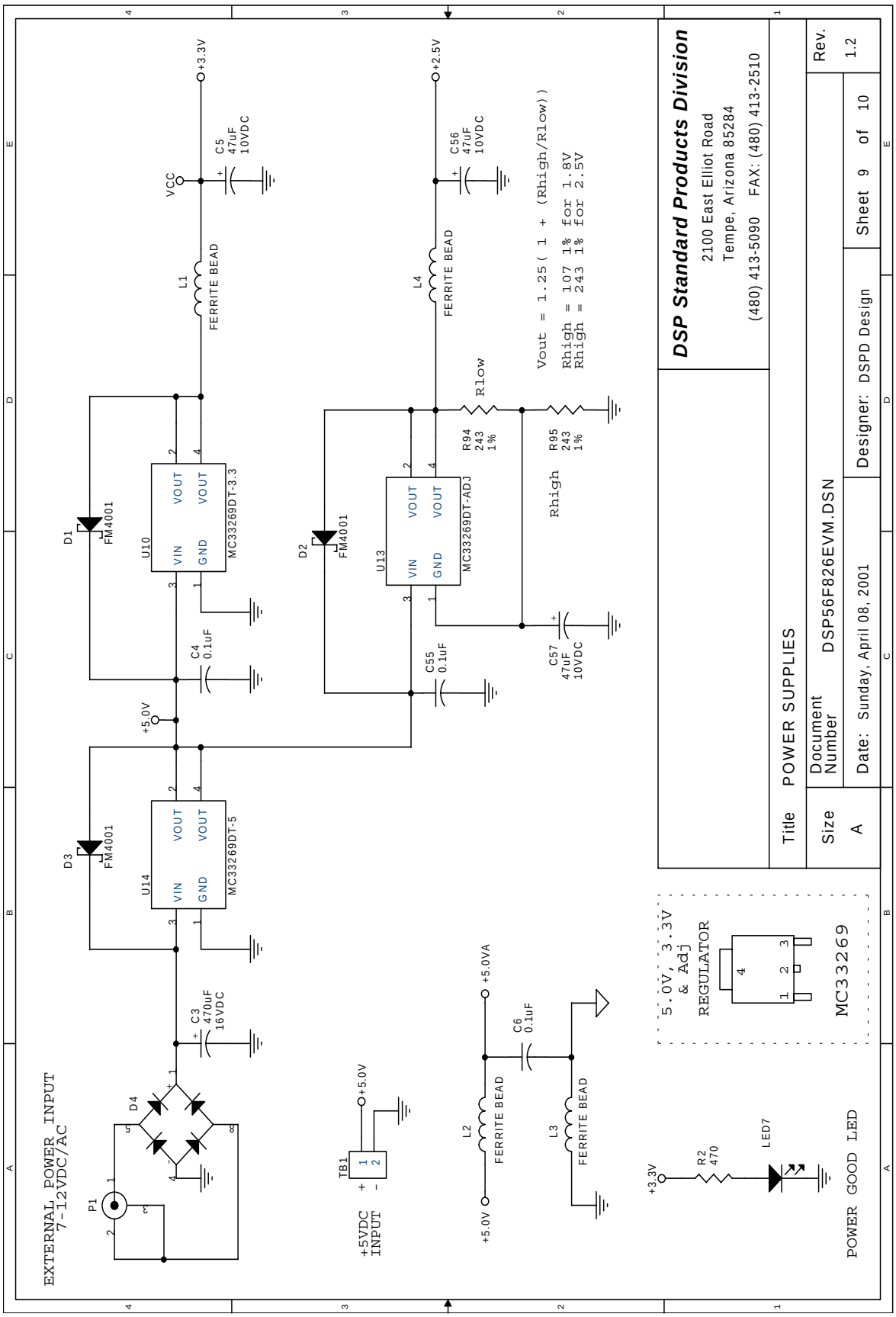

Figure A-9. Power Supplies

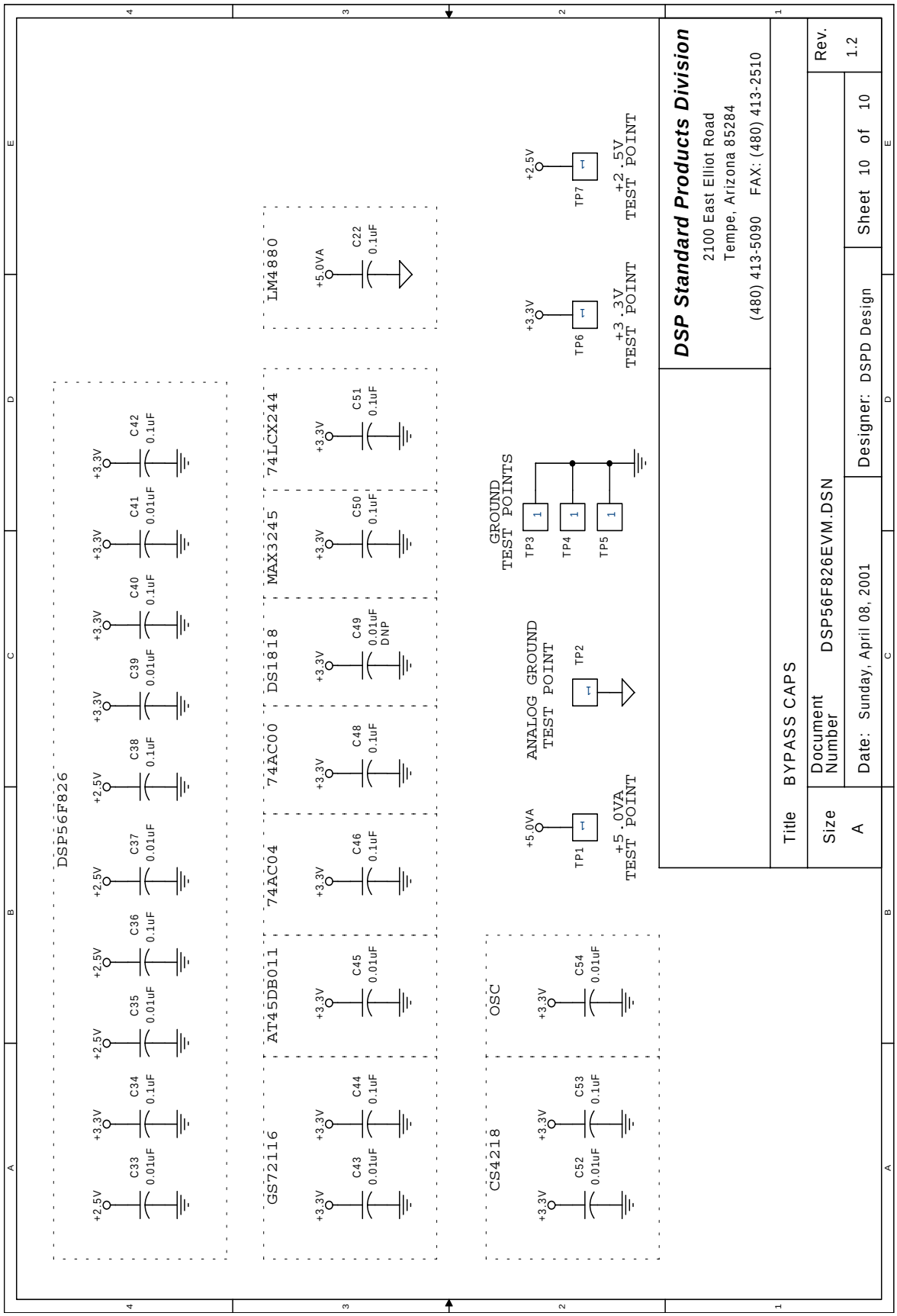

Figure A-10. Bypass Caps

Appendix B
56F826EVM Bill of Material

Qty.	Description	Ref. Designators	Vendor Part #s
Integrated Circuits			
1	DSP56F826BU80	U1	Freescale, DSP56F826BU80
1	GS72116	U2	GSI, GS72116TP-12
1	MAX3245	U3	Maxim, MAX3245EEAI
1	AT45DB011	U4	Atmel, AT45DB011-SC
1	CS4218	U5	Crystal Semiconductor, CS4218-KQ
1	LM4880	U6	National Semiconductor, LM4880M
1	12.288MHZ OSC	U7	Epson, SG-531P-12.288MC
1	74LCX244	U8	ON Semiconductor, MC74LCX244ADW
1	74AC00	U9	Fairchild, 74AC00SC
1	+3.3V Voltage Regulator	U10	ON Semiconductor, MC33269DT-3.3
1	74AC04	U11	ON Semiconductor, MC74AC04AD
1	+2.5V Voltage Regulator	U13	ON Semiconductor, MC33269DT-ADJ
1	+5.0V Voltage Regulator	U14	ON Semiconductor, MC33269DT-5
Resistors			
1	10M Ω	R1	SMEC, RC73L2A10MOHMJT
1	470 Ω	R2	SMEC, RC73L2A470OHMJT
11	270 Ω	R3, R6, R9, R11, R13—R19	SMEC, RC73L2A270OHMJT
10	47K Ω	R4, R5, R7, R8, R10, R12, R26—R29	SMEC, RC73L2A47KOHMJT
4	5.1K Ω	R20, R23—R25	SMEC, RC73L2A5.1KOHMJT

Qty.	Description	Ref. Designators	Vendor Part #s
Resistors (Continued)			
2	51 Ω	R21, R22	SMEC, RC73L2A51OHMJT
4	5.62K Ω, 1%	R30—R33	SMEC, RC73L2A5.62KOHMFT
2	39.2K Ω, 1%	R34, R35	SMEC, RC73L2A39.2KOHMFT
19	10K Ω	R36, R37, R42—R45, R67, R70—R72, R82—R85, R87, R90—R93	SMEC, RC73L2A10KOHMJT
4	20.0K Ω, 1%	R38—R40, R46	SMEC, RC73L20.0KOHMFT
12	1K Ω	R41, R55—R62, R68, R69, R86	SMEC, RC73L2A1KOHMJT
12	0 Ω	R47—R54, R88, R89, R96, R97	SMEC, RC73JP2A
2	243 Ω, 1%	R94, R95	SMEC, RC73L243OHMFT
Inductors			
4	1.0mH FERRITE BEAD	L1, L2, L3, L4	Panasonic, EXC-ELSA35V
LEDs			
2	Red LED	LED1, LED4	Hewlett-Packard, HSMS-C650
2	Yellow LED	LED2, LED5	Hewlett-Packard, HSMY-C650
3	Green LED	LED3, LED6, LED7	Hewlett-Packard, HSMG-C650
Diodes			
2	S2B-FM401	D1, D2, D3	Vishay, DL4001DICT
1	1A Bridge Rectifier	D4	General Semiconductor, DF02S
Capacitors			
1	470µF, 16V DC	C3	ELMA, RV-16V471MH10R
19	0.1µF	C4, C6, C9, C22, C30—C32, C34, C36, C38, C40, C42, C44, C46, C48, C50, C51, C53, C55	SMEC, MCCE104K2NR-T1
6	47µF, 16V DC	C5, C7, C23, C24, C56, C57	ELMA, RV2-16V470M-R
2	0.33µF	C8, C14	SMEC, MCCE334K3NR-T1
2	470pF	C10, C12	SMEC, MCCE471J2NO-T1
9	1.0µF, 25V DC	C11, C13, C19, C20, C25—C29	SMEC, MCCE105K3NR-T1

Qty.	Description	Ref. Designators	Vendor Part #s
2	0.0022μF	C15, C16	SMEC, MCCE222K2NR-T1
3	0.47μF	C17, C18, C21	SMEC, MCCE474K3NR-T1
9	0.01μF	C33, C35, C37, C39, C41, C43, C45, C52, C54	SMEC, MCCE103K2NR-T1
Jumpers			
4	1 × 2 Bergstick	JG1, JG2, JG3, JG6	SAMTEC, TSW-102-07-S-S
2	3 × 1 Bergstick	JG4, JG5	SAMTEC, TSW-103-07-S-S
1	4 × 2 Bergstick	JG7	SAMTEC, TSW-104-07-S-D
Test Points			
7	1 × 1 Bergstick	TP1—TP7	Samtec, TSW-101-07-S-S
Crystals			
1	4.00MHz Crystal	Y1	CTS, ATS04ASM-T
Connectors			
1	2.1mm coax Power Connector	P1	Switchcraft, RAPC-722
1	DB25M Connector	P2	AMPHENOL, 617-C025P-AJ121
1	DE9S Connector	P3	AMPHENOL, 617-C009S-AJ120
3	1/8” Stereo Jack	P4—P6	Switchcraft, 35RAPC4BHN2
2	51-Pin HD Connector	J1, J2	BERG, 91930-21151
1	7 x 2 Bergstick	J3	SAMTEC, TSW-107-07-S-D
1	2-Pin Terminal Block	TB1	On-Shore Technology, ED500/2DS
Switches			
3	SPST Pushbutton	S1—S3	Panasonic, EVQ-PAD05R
1	3-Position DIP SW	S4	CTS, 209-3LPST
Transistors			
1	2N2222A	Q1	ZETEX, FMMT2222ACT
Miscellaneous			
8	Shunt	SH1–SH8	Samtec, SNT-100-BL-T
4	Rubber Feet	RF1–RF4	3M, SJ5018BLKC

INDEX

Numerics

1.2A Power Supply 2-12
16-bit +2.5V/+3.3V hybrid processor 2-1
16-bit Stereo Codec Interface 2-1
1Mbit Serial EEPROM 2-1
4.00MHz Crystal Oscillator 2-1
56F826 Technical Data Preface-x
56F826/827 User's Manual Preface-x
64Kx16 bits of Data Memory 2-1
64Kx16 bits of Program Memory 2-1

C

codec Preface-ix
Coder/Decoder
    codec Preface-ix
Connectors
    Peripheral Expansion 2-16

D

Data Memory 2-3
Daughter Card Expansion Interface 2-1
Debugging 2-7
DSP56800 Family Manual Preface-x

E

EEPROM
    EEPROM Preface-ix
Electrically Erasable Programmable Read-Only
    Memory Preface-ix
Evaluation Module
    Preface-ix
EVM
    EVM Preface-ix

F

FSRAM 2-1, 2-3

G

General Purpose Input and Output Preface-ix
GPIO 2-2
    GPIO Preface-ix

H

Host Parallel Interface Connector 2-7
Host Target Interface 2-7

I

IC
    IC Preface-ix
Integrated Circuit
    Preface-ix

J

JG1 1-3
Joint Test Action Group Preface-ix
JTAG 1-1, 2-1
    Connector 2-8
    JTAG Preface-ix
JTAG Port Interface 2-1
Jumper Group 1-3
    JG2 1-3
    JG3 1-3
    JG4 1-3
    JG5 1-3
    JG6 1-3
    JG7 1-3

L

Low-Profile Quad Flat Pack Preface-ix
LQFP
    LQFP Preface-ix

M

MPIO
    MPIO Preface-ix
Multi-Purpose Input and Output port Preface-ix

O

On-Board Power Regulation 2-2
OnCE

OnCE Preface-ix
OnCE(TM) 1-1
On-Chip Emulation Preface-ix
Operating Mode 2-6
Optional External Oscillator Frequency Input 2-1

P

Parallel JTAG Host Target Interface 2-1
PCB
PCB Preface-ix
Peripheral Connectors 2-15
Phase Locked Loop Preface-ix
PLL
PLL Preface-ix
Printed Circuit Board Preface-ix
Program Memory 2-3

R

RAM
RAM Preface-ix
Random Access Memory Preface-ix
Read-Only Memory Preface-ix
Real-Time Debugging 2-7
ROM
ROM Preface-ix
RS-232
Interface 2-5
Level Converter 2-5
Schematic Diagram 2-5
RS-232 Interface 2-1
RS-232 Serial Communications 2-5

S

SCI 2-2
SCI Preface-ix
Serial Communications Interface Preface-ix
Serial Peripheral Interface Preface-ix
SPI 2-2
SPI Preface-ix
SRAM
External Data 2-1
External Program 2-1
SRAM Preface-ix
SSI 2-2
SSI Preface-ix
Static Random Access Memory Preface-ix
Stereo 16-bit Codec Interface 2-1
Stereo Headphone Interface 2-1
Synchronous Serial Interface Preface-ix

W

Wait State Preface-ix
WS
WS Preface-ix

How to Reach Us:

Home Page:
www.freescale.com

E-mail:
support@freescale.com

USA/Europe or Locations Not Listed:
Freescale Semiconductor
Technical Information Center, CH370
1300 N. Alma School Road
Chandler, Arizona 85224
+1-800-521-6274 or +1-480-768-2130
support@freescale.com

Europe, Middle East, and Africa:
Freescale Halbleiter Deutschland GmbH
Technical Information Center
Schatzbogen 7
81829 Muenchen, Germany
+44 1296 380 456 (English)
+46 8 52200080 (English)
+49 89 92103 559 (German)
+33 1 69 35 48 48 (French)
support@freescale.com

Japan:
Freescale Semiconductor Japan Ltd.
Headquarters
ARCO Tower 15F
1-8-1, Shimo-Meguro, Meguro-ku,
Tokyo 153-0064, Japan
0120 191014 or +81 3 5437 9125
support.japan@freescale.com

Asia/Pacific:
Freescale Semiconductor Hong Kong Ltd.
Technical Information Center
2 Dai King Street
Tai Po Industrial Estate
Tai Po, N.T., Hong Kong
+800 2666 8080
support.asia@freescale.com

For Literature Requests Only:
Freescale Semiconductor Literature Distribution Center
P.O. Box 5405
Denver, Colorado 80217
1-800-441-2447 or 303-675-2140
Fax: 303-675-2150
LDCForFreescaleSemiconductor@hibbertgroup.com

Information in this document is provided solely to enable system and software implementers to use Freescale Semiconductor products. There are no express or implied copyright licenses granted hereunder to design or fabricate any integrated circuits or integrated circuits based on the information in this document.

Freescale Semiconductor reserves the right to make changes without further notice to any products herein. Freescale Semiconductor makes no warranty, representation or guarantee regarding the suitability of its products for any particular purpose, nor does Freescale Semiconductor assume any liability arising out of the application or use of any product or circuit, and specifically disclaims any and all liability, including without limitation consequential or incidental damages. “Typical” parameters that may be provided in Freescale Semiconductor data sheets and/or specifications can and do vary in different applications and actual performance may vary over time. All operating parameters, including “Typicals”, must be validated for each customer application by customer’s technical experts. Freescale Semiconductor does not convey any license under its patent rights nor the rights of others. Freescale Semiconductor products are not designed, intended, or authorized for use as components in systems intended for surgical implant into the body, or other applications intended to support or sustain life, or for any other application in which the failure of the Freescale Semiconductor product could create a situation where personal injury or death may occur. Should Buyer purchase or use Freescale Semiconductor products for any such unintended or unauthorized application, Buyer shall indemnify and hold Freescale Semiconductor and its officers, employees, subsidiaries, affiliates, and distributors harmless against all claims, costs, damages, and expenses, and reasonable attorney fees arising out of, directly or indirectly, any claim of personal injury or death associated with such unintended or unauthorized use, even if such claim alleges that Freescale Semiconductor was negligent regarding the design or manufacture of the part.

Freescale™ and the Freescale logo are trademarks of Freescale Semiconductor, Inc. All other product or service names are the property of their respective owners. This product incorporates SuperFlash® technology licensed from SST.

© Freescale Semiconductor, Inc. 2005. All rights reserved.

DSP56F826EVMUM
Rev. 2
07/2005