SOT2095-1

FBGA594, fine-pitch ball grid array, 594 terminals, 0.8 mm pitch, 21 mm x 21 mm x 1.63 mm body

26 June 2025 Package information

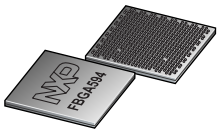

1 Package summary

Package type descriptive code	FBGA594
Package style descriptive code	FBGA (fine-pitch ball grid array)
Package body material type	P (plastic)
Mounting method type	S (surface mount)
Issue date	10-06-2025
Manufacturer package code	98ASA01647D

Table 1. Package summary

Parameter	Min	Nom	Max	Unit
package length	-	21	-	mm
package width	-	21	-	mm
package height	1.45	1.63	1.82	mm
nominal pitch	-	0.8	-	mm
actual quantity of termination	-	594	-	

2 Package outline

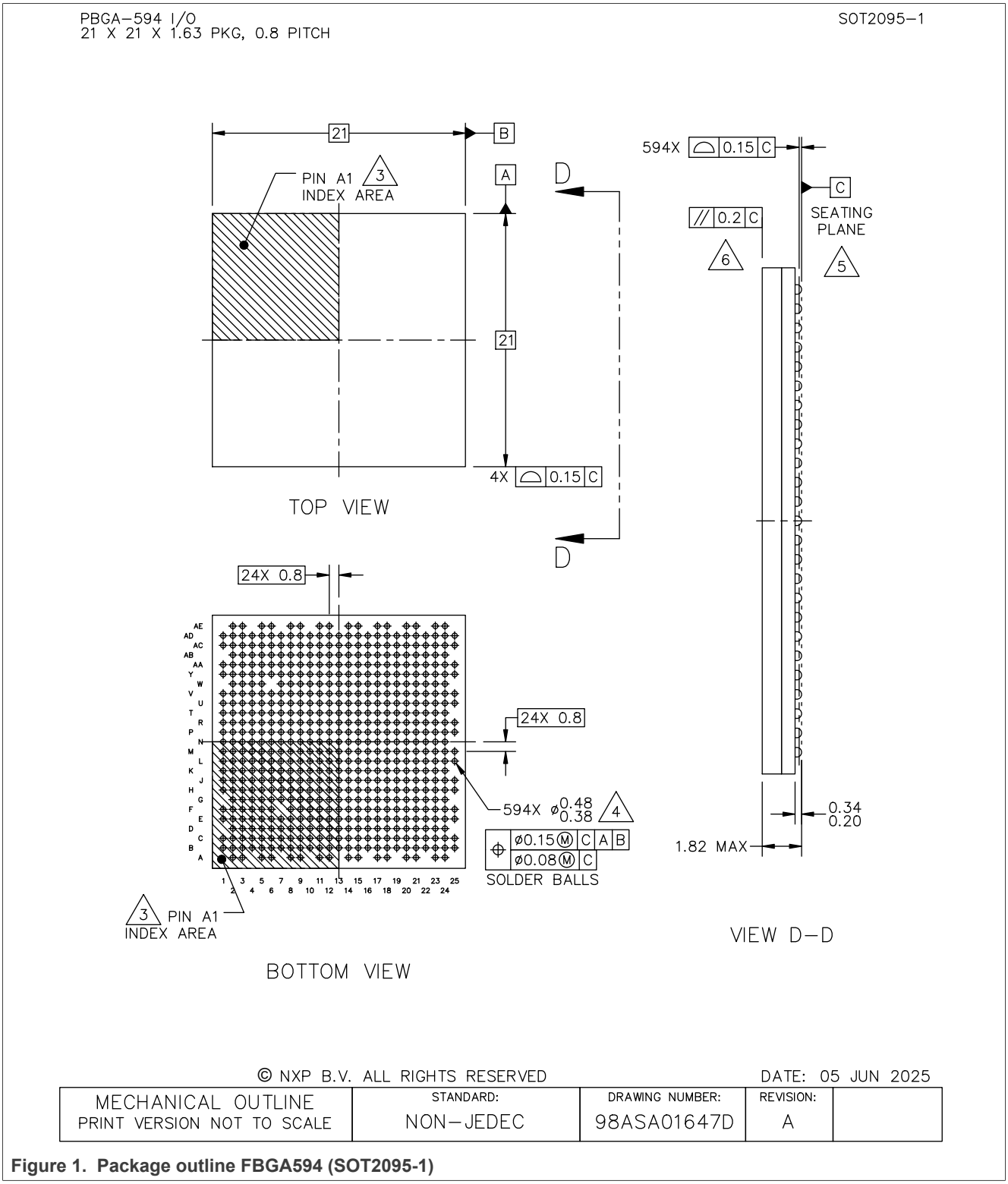

Figure 1. Package outline FBGA594 (SOT2095-1)

© 2025 NXP B.V. All rights reserved.

3 Soldering

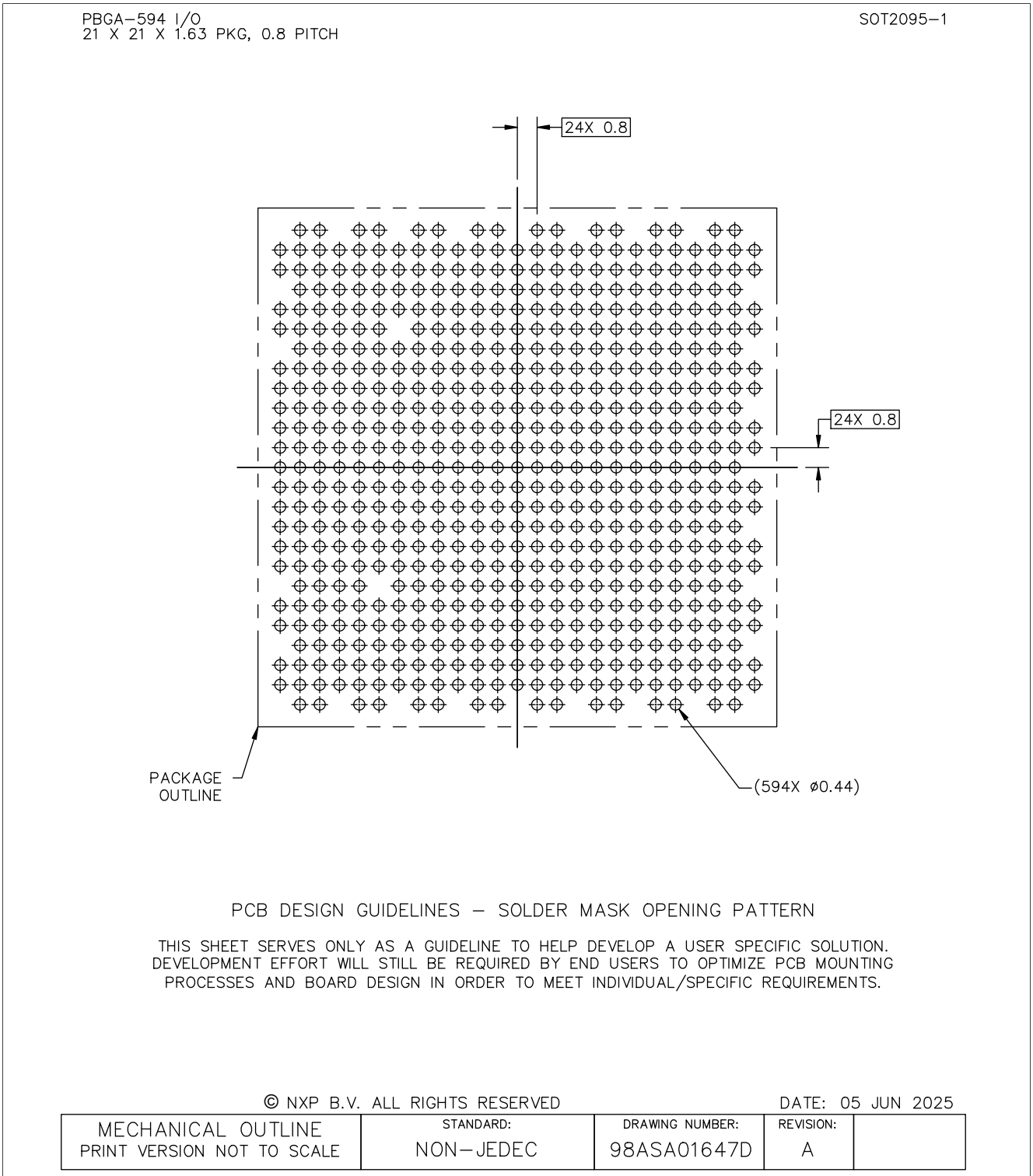

Figure 2. Reflow soldering footprint part1 FBGA594 (SOT2095-1)

© 2025 NXP B.V. All rights reserved.

PBGA–594 I/O
21 X 21 X 1.63 PKG, 0.8 PITCH

SOT2095–1

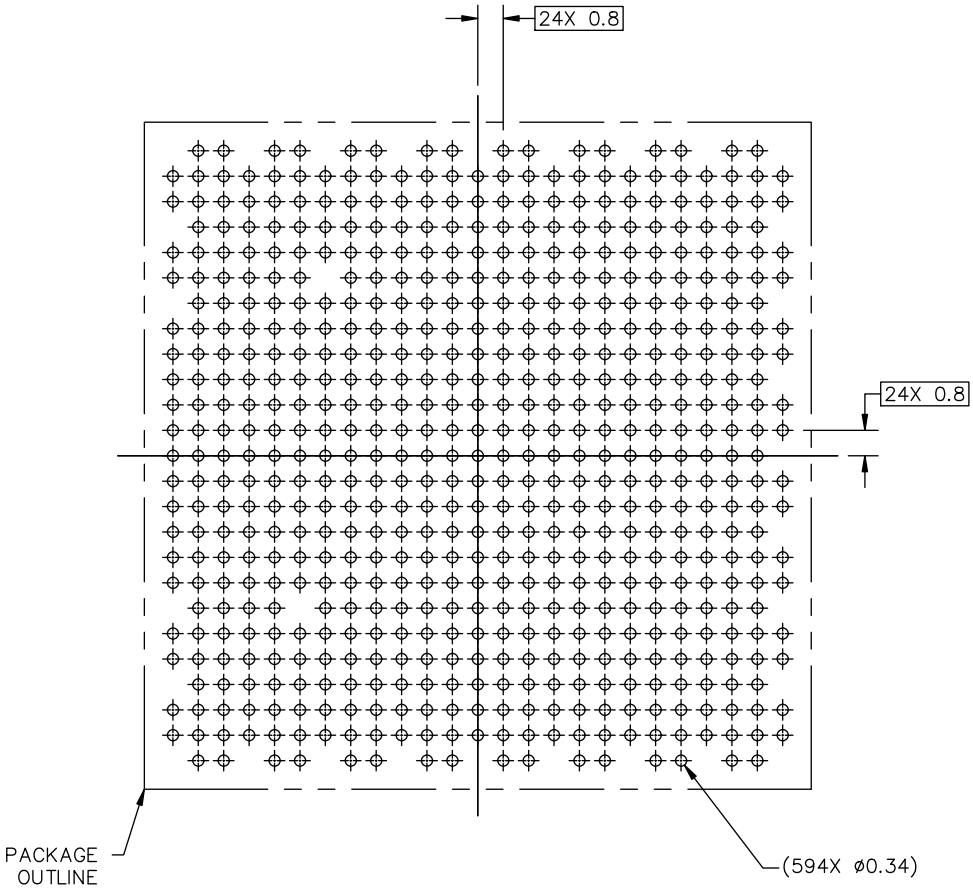

PCB DESIGN GUIDELINES – I/O PADS AND SOLDERABLE AREA

THIS SHEET SERVES ONLY AS A GUIDELINE TO HELP DEVELOP A USER SPECIFIC SOLUTION. DEVELOPMENT EFFORT WILL STILL BE REQUIRED BY END USERS TO OPTIMIZE PCB MOUNTING PROCESSES AND BOARD DESIGN IN ORDER TO MEET INDIVIDUAL/SPECIFIC REQUIREMENTS.

© NXP B.V. ALL RIGHTS RESERVED

DATE: 05 JUN 2025

MECHANICAL OUTLINE PRINT VERSION NOT TO SCALE	STANDARD: NON–JEDEC	DRAWING NUMBER: 98ASA01647D	REVISION: A	

Figure 3. Reflow soldering footprint part2 FBGA594 (SOT2095-1)

PBGA–594 I/O
21 X 21 X 1.63 PKG, 0.8 PITCH

SOT2095–1

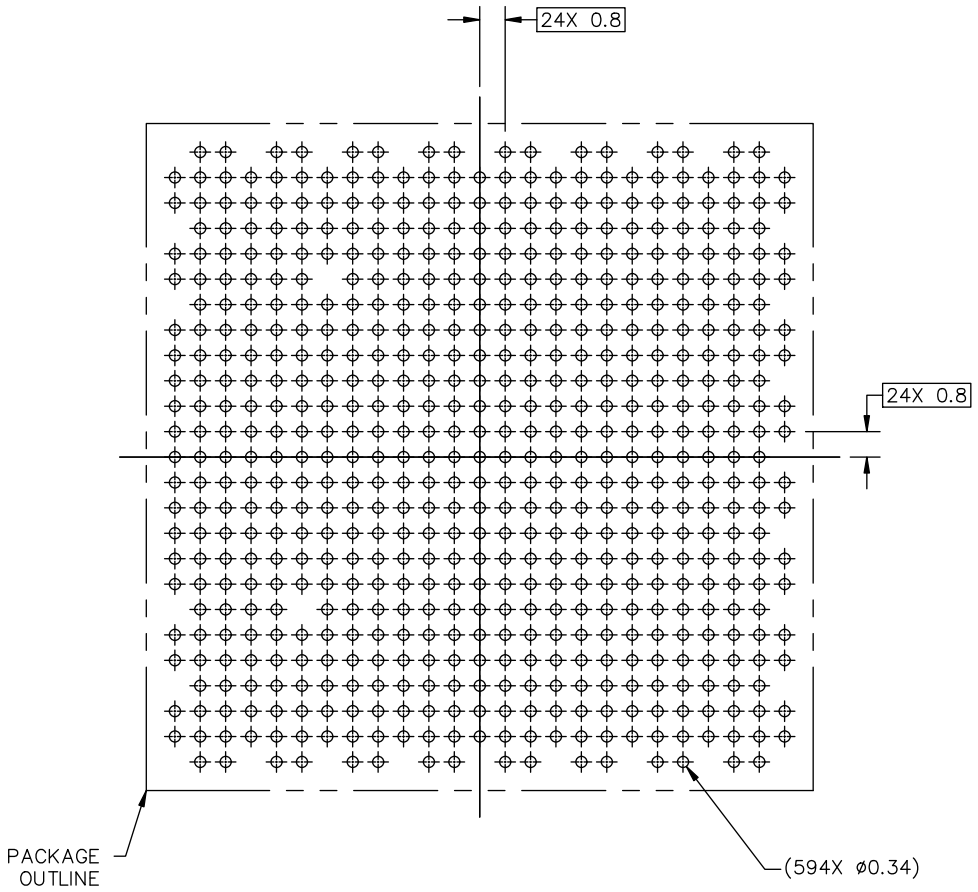

RECOMMENDED STENCIL THICKNESS 0.125

PCB DESIGN GUIDELINES – SOLDER PASTE STENCIL

THIS SHEET SERVES ONLY AS A GUIDELINE TO HELP DEVELOP A USER SPECIFIC SOLUTION. DEVELOPMENT EFFORT WILL STILL BE REQUIRED BY END USERS TO OPTIMIZE PCB MOUNTING PROCESSES AND BOARD DESIGN IN ORDER TO MEET INDIVIDUAL/SPECIFIC REQUIREMENTS.

© NXP B.V. ALL RIGHTS RESERVED

DATE: 05 JUN 2025

MECHANICAL OUTLINE PRINT VERSION NOT TO SCALE	STANDARD: NON–JEDEC	DRAWING NUMBER: 98ASA01647D	REVISION: A	

Figure 4. Reflow soldering footprint part3 FBGA594 (SOT2095-1)

PBGA–594 I/O
21 X 21 X 1.63 PKG, 0.8 PITCH

SOT2095–1

NOTES:

1. ALL DIMENSIONS IN MILLIMETERS.
2. DIMENSIONING AND TOLERANCING PER ASME Y14.5M–1994.
3. PIN A1 FEATURE SHAPE, SIZE AND LOCATION MAY VARY.
4. MAXIMUM SOLDER BALL DIAMETER MEASURED PARALLEL TO DATUM C.
5. DATUM C, THE SEATING PLANE, IS DETERMINED BY THE SPHERICAL CROWNS OF THE SOLDER BALLS.
6. PARALLELISM MEASUREMENT SHALL EXCLUDE ANY EFFECT OF MARK ON TOP SURFACE OF PACKAGE.

© NXP B.V. ALL RIGHTS RESERVED

DATE: 05 JUN 2025

MECHANICAL OUTLINE PRINT VERSION NOT TO SCALE	STANDARD: NON–JEDEC	DRAWING NUMBER: 98ASA01647D	REVISION: A	

Figure 5. Package outline note FBGA594 (SOT2095-1)

4 Legal information

Disclaimers

Limited warranty and liability — Information in this document is believed to be accurate and reliable. However, NXP Semiconductors does not give any representations or warranties, expressed or implied, as to the accuracy or completeness of such information and shall have no liability for the consequences of use of such information. NXP Semiconductors takes no responsibility for the content in this document if provided by an information source outside of NXP Semiconductors.

In no event shall NXP Semiconductors be liable for any indirect, incidental, punitive, special or consequential damages (including - without limitation - lost profits, lost savings, business interruption, costs related to the removal or replacement of any products or rework charges) whether or not such damages are based on tort (including negligence), warranty, breach of contract or any other legal theory.

Notwithstanding any damages that customer might incur for any reason whatsoever, NXP Semiconductors' aggregate and cumulative liability towards customer for the products described herein shall be limited in accordance with the Terms and conditions of commercial sale of NXP Semiconductors.

Right to make changes — NXP Semiconductors reserves the right to make changes to information published in this document, including without limitation specifications and product descriptions, at any time and without notice. This document supersedes and replaces all information supplied prior to the publication hereof.

All information provided in this document is subject to legal disclaimers.

© 2025 NXP B.V. All rights reserved.

Contents

1 Package summary 1
2 Package outline 2
3 Soldering 3
4 Legal information 7

© 2025 NXP B.V.

All rights reserved.